© 2008

María J. Cabrera-Puche

ALL RIGHTS RESERVED

NULL SUBJECT PATTERNS IN LANGUAGE CONTACT:

THE CASE OF DOMINICAN SPANISH

by

MARÍA J. CABRERA-PUCHE

Graduate School-New Brunswick

Rutgers, The State University of New Jersey

in partial fulfillment of the requirements

for the degree of

Doctor of Philosophy

Graduate Program in Spanish

Written under the direction of

Liliana Sánchez, PhD

and approved by

JACQUELINE TORIBIO (LS)

New Brunswick, New Jersey

January, 2008

ABSTRACT OF THE DISSERTATION

Null subject patterns in language contact: the case of Dominican Spanish

by MARÍA J. CABRERA-PUCHE

Dissertation Director:

Dr. Liliana Sánchez

Linguistic change can be caused by the diachronic evolution of languages, or by external factors, such as language contact. In this dissertation, language internal changes and the effects of language contact on linguistic change are studied by analyzing four properties normally associated with the *pro*-drop parameter (phonologically null subjects, SV inversion, expletives, and *that*-trace filter) in Dominican Spanish (DS). The internal diachronic change is studied in forty DS speakers from two areas of the Dominican Republic (DR): El Cibao (n = 20) and Santo Domingo (n = 20). DS has been said to be undergoing an internal diachronic change towards a non-null subject language, but still reflecting properties of null subject languages, and El Cibao has been considered the area leading this linguistic change. A study of the four *pro*-drop properties mentioned above by speakers from Santo Domingo and El Cibao, two distinct geographical areas in the

DR, and by speakers of different age ranges and different educational levels was conducted in order to find evidence of the spread of this internal change throughout the island. Data for the study was obtained from oral production and grammaticality judgment tasks. This dissertation also addresses the influence that other languages exert on the four *pro*-drop properties in DS. Data from a group of twenty DS/English bilingual speakers who are exposed to English, Caribbean (Puerto-Rican, Cuban, and DS) and non-Caribbean Spanish varieties (GS) were collected and analyzed to determine the effects of language contact on language change. English and GS have opposite values in the representation of these properties, whereas the Caribbean group has a mixed-system.

Results show that the four properties are affected differently. Specifically, the SV inversion property seems to be affected by English more than the phonologically null subject property. However, no statistically significant data was obtained for the other two properties. Therefore, two suggestions arise: 1) these four *pro*-drop properties do not form a cluster of properties, or 2) these four properties are affected differently by a language contact situation.

Acknowledgement

I wish to thank sincerely the Department of Spanish and Portuguese at Rutgers, the State University of New Jersey, and to my dissertation committee. I would like to express special gratitute to my director Dr. Liliana Sánchez, as well as Dr. José Camacho, and Dr. Nydia Flores, two of my committee members, for their incisive and decisive contibutions in defining the statistical analysis methodology followed in this study. I am very thankful to Dr. Thomas Stephens for his great contribution to my dissertation committee, his unconditional guidance and support, and his professionalism, and to Dr. Jacqueline Toribio for serving as the external member of my committee and providing wonderful suggestions and comments. My special appreciation goes to Jennifer Flaherty, Rosy Ruiz, and Marisa Orsogna, for all their help, assistance, and friendship during my stay at Rutgers.

It is with sincere gratitude that I recognize the World Language Institute at Rutgers University, and especially to Dr. Ursula Atkinson, Ms. Carolyn Burger, Ms. Daissy Santamaría, Ms. Pat Blum, and Ms. Marion Yudow, as well as to Dr. Karen Sánchez for not only instilling confidence in my work as an instructor, which allowed me to work in the field of language pedagogy simultaneously with my research activities. Each of these professional women offered me their continuous support, encouragement, and friendship, for which I am greatly indebted.

My very special gratitude goes to Joselin Tovar, for being my inspiration in this project, and for having a continuous presence in my life in the U.S.; and to Father Alcides Castro. Special recognition must go to all my participants in the Dominican Republic and in the U.S. Their collaboration was essential in running my experiments. My sincere

appreciation to my colleagues (Juanjo Adriasola, Mary Barnard, Claudia Cabello, Marta Cabrera, Nadia Celis, Carmina Chung, Selma Cohen, Carolina Diaz, Valeria Garrote, Patricia Granja, Felipe Troncoso, Molly Palmer, Vivi Pinochet, Candace Plunkett, Damián Suárez, Macarena Urzúa, and Julieta Vitullo) and all professors at Rutgers, who offered me their unconditional support and help in recruiting some of my participants. Special thanks are extended to Dr. Adolfo Snaidas, who will always be among us.

Heartfelt thanks to my beloved partner and husband José Ricardo Basto, who provided me his unconditional support and love, and experienced the joys and difficulties of completing this dissertation. Special thanks to my family for their encouragement throughout the completion of this degree Domingo, Fina, Carmen María, Pedro, Faride, and my beautiful goddaughter Lara; and Mami (Clara), José A., Patty, Dan, and my adorable nephew Matthew. Thanks to God for blessing me with the wonderful gift of life.

Dedication

To my adorable husband,

José Ricardo

‘Chiquitajo minín’ =^.^=

Table of contents

Copyright

Title page i

Abstract ii

Acknowledgement iv

Dedication vi

Table of contents vii

List of tables xviii

List of figures xxxi

Introduction 1

Chapter 1. Null subjects in language change and language contact situations

1.1. Introduction 5

1.2. *Pro*-drop properties 11

1.2.1. Phonologically null subjects 14

1.2.1.1. General Spanish 15

1.2.1.2. English 16

1.2.1.3. Dominican Spanish 16

1.2.1.4. Research questions (RQ) and hypotheses (H) 19

1.2.2. Subject-verb inversion 21

1.2.2.1. General Spanish 21

1.2.2.1.1. Declarative sentences (GS) 21

1.2.2.1.1.1. Preverbal subjects in declarative sentences (GS) 22

1.2.2.1.1.2. Postverbal subjects in declarative sentences (GS) 22

1.2.2.1.2. Interrogative sentences (GS) 23

1.2.2.1.2.1. Postverbal subjects in interrogative sentences (GS) 25

1.2.2.1.2.2. Preverbal subjects in interrogative sentences (GS) 25

1.2.2.2. English 27

1.2.2.3. Dominican Spanish 27

1.2.2.4. Research questions (RQ) and hypotheses (H) 29

1.2.3. Expletives 30

1.2.3.1. General Spanish 30

1.2.3.2. English 31

1.2.3.3. Dominican Spanish 31

1.2.3.4. Research questions (RQ) and hypotheses (H) 33

1.2.4. *That*-trace Phenomenon 33

1.2.4.1. General Spanish 34

1.2.4.2. English 35

1.2.4.3. Dominican Spanish 35

1.2.4.4. Research questions (RQ) and hypotheses (H) 36

1.3. Social factors 36

1.3.1. Age 37

1.3.2. Level of education 38

1.3.3. Geographical area 39

1.3.4. Patterns of language use 41

Chapter 2. Literature review

2.1. Introduction 44

2.2. Description of properties 45

2.2.1. Phonologically null subjects 46

2.2.1.1. General Spanish 46

2.2.1.2. English 50

2.2.1.3. Dominican Spanish 52

2.2.2. Subject-verb inversion 59

2.2.2.1. General Spanish 59

2.2.2.1.1. Declarative sentences (GS) 59

2.2.2.1.1.1. Preverbal subjects in declarative sentences (GS) 60

2.2.2.1.1.2. Postverbal subjects in declarative sentences (GS) 63

2.2.2.1.2. Interrogative sentences (GS) 66

2.2.2.1.2.1. Postverbal subjects in interrogative sentences (GS) 67

2.2.2.1.2.2. Preverbal subjects in interrogative sentences (GS) 70

2.2.2.2. English (Subject-verb inversion) 73

2.2.2.3. Dominican Spanish (Subject-verb inversion) 74

2.2.2.3.1. Preverbal and postverbal position of subjects in declarative sentences (DS) 75

2.2.2.3.2. Preverbal and postverbal position of subjects in interrogative sentences (DS) 77

2.2.3. Expletives 83

2.2.3.1. General Spanish 86

2.2.3.2. English 86

2.2.3.3. Dominican Spanish 87

2.2.4. *That*-trace filter 89

2.2.4.1. General Spanish 92

2.2.4.2. English 92

2.2.4.3. Dominican Spanish 93

Chapter 3. Methodology

3.1. Introduction 96

3.2. Demographics 99

3.2.1. Monolingual group: residents of the Dominican Republic 100

3.2.1.1. Age and gender of monolingual participants: residents of the Dominican Republic 100

3.2.1.2. Educational level of monolingual participants: residents of the Dominican Republic 101

3.2.2. Bilingual group: Students residing in New Brunswick (NJ) 103

3.2.2.1. Age of arrival to the U.S. of BSNB 105

3.2.2.2. Contact with other varieties (BSNB) 106

3.2.2.3. Language at home (BSNB) 107

3.2.2.4. Language comfort level (BSNB) 107

3.3. Contacts for data collection 108

3.3.1. Contacts in the Dominican Republic (El Cibao and Santo Domingo) 108

3.3.2. Contacts in New Brunswick (New Jersey, U.S.) 109

3.4. Data collection setting 110

3.4.1. Data collection setting: Monolinguals (Dominican Republic) 111

3.4.2. Data collection setting: BSNB 113

3.5. Materials 114

3.5.1. Biolinguistic and social data collection 114

3.5.2. Linguistic data collection 115

3.5.2.1. Grammaticality Judgments (A-test, B-test, and C-test) 115

3.5.2.1.1. A-test: Interrogative sentences
(two options: preverbal or postverbal) 119

3.5.2.1.2. B-test: Interrogative sentences
(three options: preverbal, postverbal & null) 122

3.5.2.1.3. C-test: Declaratives
(three options: preverbal, postverbal and null) 125

3.5.2.2. Oral corpus 127

3.5.2.2.1. Frog-story: Guided oral production of declarative sentences 129

3.5.2.2.2. Role-play (in a court): Semi-guided oral production of
Interrogative sentences 130

3.5.2.2.3. Personal story: Free oral production of declarative sentences 132

Chapter 4. Results

4.1. Introduction 133

4.2. Results from the Grammaticality Judgment tasks 135

4.2.1. Overt vs. null subjects: Results from the GJs (B-test and C-test) by the two monolingual groups 135

4.2.2. Subject-verb inversion: Results from the GJs (A-test, B-test and C-test) by the two monolingual groups 145

4.2.3. Expletives: Results from the GJs (B-test and C-test) by the two monolingual groups 166

4.2.4. *That*-trace filter: Results from the GJs (A-test and B-test) by the two monolingual groups 168

4.2.5. Social factors: Results from the GJs (A-test, B-test, and C-test) 170

4.2.5.1. Social factors – Age in El Cibao: Results from the GJs (A-test, B-test, and C-test) 171

4.2.5.2. Social factors – Level of education in Santo Domingo-: Results from the GJs (A-test, B-test, and C-test) 187

4.2.5.3. Social factors – Origin: Results from the GJs (A-test, B-test, and C-test) by the three DS groups 199

4.2.5.3.1. Overt and null subjects (Social factors – Origin) 199

4.2.5.3.2. Subject-verb inversion (Social factors – Origin) 207

4.2.5.3.3. Expletives (Social factors – Origin) 217

4.2.5.3.4. *That*-trace filter (Social factors – Origin) 219

4.2.5.4. Social factors – Patterns of language use-: Results from the GJs (A-test, B-test, and C-test) by the bilingual group 222

4.2.5.4.1. Social factors – Patterns of language use (Language at home and language comfort level) 222

4.2.5.4.2. Social factors – Patterns of language use (Language contact) 239

4.2.6. Summary of the four *pro*-drop properties in the grammaticality judgment tasks (A-test, B-test, and C-test), according to different linguistic and social factors 246

4.2.6.1. Summary of the four *pro*-drop properties in the grammaticality judgment tasks (A-test, B-test, and C-test), according to different linguistic factors 246

4.2.6.2. Summary of the four *pro*-drop properties in the grammaticality judgment tasks (A-test, B-test, and C-test), according to different social factors 252

4.3. Results from the oral tasks 256

4.3.1. Overt vs. null subjects: Results from the three oral tasks by the two monolingual groups 258

4.3.2. Subject-verb inversion: Results from the three oral tasks by the two monolingual groups 265

4.3.2.1. Subject-verb inversion (Pronominal and lexical): Results by the monolinguals 265

4.3.2.2. Subject-verb inversion (Age): Results by the monolinguals from El Cibao 282

4.3.2.3. Subject-verb inversion (Levels of education): Results by the monolinguals from Santo Domingo 290

4.3.3. Overt vs. null subjects: Results comparing the two monolingual groups and the bilingual group of DS students 298

4.3.3.1. Overt vs. null subjects (Person and number): Results from the bilingual group of DS students 304

4.3.4. Subject-verb inversion: Results from the two monolingual groups and the bilingual group of DS students 304

4.3.4.1. Subject-verb inversion (Pronominal vs. lexical): Results from the two monolingual groups and the bilingual group of DS students 305

4.3.4.2. Subject-verb inversion (Wh-argument vs. wh-adjunct): Results from the two monolingual groups and the bilingual group of DS students 316

4.3.4.3. Subject-verb inversion (Patterns of language use: language at home, and language preference, and language contact): Results from the bilingual group of DS students 318

4.3.4.3.1. Subject-verb inversion (Patterns of language use: language at home, and language preference): Results from the bilingual group of DS students 319

4.3.4.3.2. Subject-verb inversion (Patterns of language use: language contact): Results from the bilingual group of DS students 328

4.3.5. Summary of two *pro*-drop properties in the oral tasks (role-play, personal story, and frog story), according to different linguistic and social factors 334

4.3.5.1. Summary of two *pro*-drop properties in the oral tasks (role-play, personal story, and frog story), according to different linguistic factors 334

4.3.5.2. Summary of two *pro*-drop properties in the oral tasks (role-play, personal story, and frog story), according to different social factors 339

Chapter 5. Conclusions

5.1. Introduction 344

5.2. Overview of the grammatical representation of the *pro*-drop properties by each DS group 344

5.2.1. Phonologically null subjects 346

5.2.1.1. The Spanish grammar of El Cibao (phonologically null subjects) 347

5.2.1.2. The Spanish grammar of Santo Domingo (phonologically null subjects) 350

5.2.1.3. The Spanish grammar of U.S. bilingual DS (phonologically null subjects) 354

5.2.1.4. Final remarks on phonologically null subjects in the three DS groups 358

5.2.2. Inversion of the subject and the verb 360

5.2.2.1. The Spanish grammar of El Cibao (subject-verb inversion) 360

5.2.2.2. The Spanish grammar of Santo Domingo (subject-verb inversion) 364

5.2.2.3. The Spanish grammar of U.S. bilingual DS (subject-verb inversion) 366

5.2.2.4. Final remarks on subject-verb inversion in the three DS groups 368

5.3. Implications of findings in this study for language change 369

5.4. Future research 373

5.5. Final remarks 375

Appendix 1. 379

Appendix 2. Definition of variables 382

A.2.1. Linguistic variables 382

A.2.1.1. Instruments for linguistic data collection 382

A.2.1.2. Subject type 382

A.2.1.3. Position of subject 383

A.2.1.4. Subject person and number 384

A.2.1.5. Sentence type 385

A.2.2. Social factors 385

A.2.2.1. Residence of the participants 386

A.2.2.2. Monolingual vs. bilingual group 386

A.2.2.3. Relevant to bilinguals (patterns of language use): language contact 386

A.2.2.4. Relevant to bilinguals (patterns of language use): language spoken at home 387

A.2.2.5. Relevant to bilinguals (patterns of language use): language comfort level 387

A.2.2.6. Relevant to monolinguals: geographical area in the Dominican Republic 388

A.2.2.7. Relevant to monolinguals: age 388

A.2.2.8. Relevant to monolinguals: educational level 388

A.2.3. Included and excluded elements 389

Appendix 3. 392

Bibliography 393

Curriculum vitae 410

List of tables

Table 1.1. *Pro*-drop properties of GS, DS, and English 12

Table 1.2. Grammatical features in GS and in English (Toribio, 2000a) 14

Table 3.1. Distribution of participants according to age in El Cibao 101

Table 3.2. Distribution of Santo Domingo participants according to level of education 102

Table 3.3. Distribution of bilingual students according to place of birth 104

Table 3.4. Distribution of bilingual participants (age of arrival to the U.S.) 105

Table 3.5. Distribution of contact with Spanish varieties, as self-reported by the BSNB participants 106

Table 3.6. Distribution of languages spoken at home by DS bilingual participants 107

Table 3.7. The language comfort level reported by BSNB 107

Table 3.8. Summary of properties of the three GJ tasks used 118

Table 3.9. Summary of properties of the three oral tasks used 128

Table 4.1. Cross-tabulation of speakers from El Cibao and Santo Domingo with regard to overt and null subjects in interrogatives – B-Test (N = 1123) 136

Table 4.2. Cross-tabulation of speakers from El Cibao and Santo Domingo with regard to overt and null subjects in declaratives – C-Test (N = 1243) 138

Table 4.3. Cross-tabulation of speakers from El Cibao and Santo Domingo with regard to overt subjects and person and number of verb in interrogatives – B-test (N = 1123) 141

Table 4.4. Cross-tabulation of speakers from El Cibao and Santo Domingo with regard to overt subjects and person and number of verb in declaratives – C-test (N = 1243) 143

Table 4.5. Cross-tabulation of speakers from El Cibao and Santo Domingo with regard to preverbal pronominal and lexical subjects in interrogatives – A-test (N = 1083) 146

Table 4.6. Cross-tabulation of speakers from El Cibao and Santo Domingo with regard to preverbal pronominal and lexical subjects in interrogatives – B-test (N = 1123) 148

Table 4.7. Cross-tabulation of speakers from El Cibao and Santo Domingo with regard to preverbal pronominal and lexical subjects in declaratives – C-test (N = 1243) 150

Table 4.8. Cross-tabulation of speakers from El Cibao and Santo Domingo with regard to postverbal pronominal and lexical subjects in interrogatives – A-test (N = 1083) 152

Table 4.9. Cross-tabulation of speakers from El Cibao and Santo Domingo with regard to postverbal pronominal and lexical subjects in interrogatives – B-test (N = 1123) 154

Table 4.10. Cross-tabulation of speakers from El Cibao and Santo Domingo with regard to post-verbal pronominal and lexical subjects in declaratives – C-test (N = 1243) 156

Table 4.11. Cross-tabulation of speakers from El Cibao and Santo Domingo with regard to preverbal subjects with wh-argument and wh-adjunct phrases – A-test (N = 722) 158

Table 4.12. Cross-tabulation of speakers from El Cibao and Santo Domingo with regard to postverbal subjects with wh-argument and wh-adjunct phrases – A-test (N = 722) 160

Table 4.13. Cross-tabulation of speakers from El Cibao and Santo Domingo with regard to preverbal subjects with wh-argument and wh-adjunct phrases – B-test (N = 762) 162

Table 4.14. Cross-tabulation of speakers from El Cibao and Santo Domingo with regard to postverbal subjects with wh-argument and wh-adjunct phrases – B-test (N = 762) 164

Table 4.15. Cross-tabulation of speakers from El Cibao and Santo Domingo with regard to overt expletives in interrogatives and declaratives – B-test and C-test (N = 204) 167

Table 4.16. Cross-tabulation of speakers from El Cibao and Santo Domingo with regard to null complementizers in *that*-trace structures – A-test and B-test (N = 320) 169

Table 4.17. Cross-tabulation of speakers from El Cibao with regard to null subjects in declaratives and interrogatives according to age – B-test and C-test (N = 1184) 172

Table 4.18. Cross-tabulation of speakers from El Cibao with regard to postverbal subjects in interrogatives according to age – A-test and B-test (N = 1104) 175

Table 4.19. Cross-tabulation of speakers from El Cibao with regard to postverbal subjects in declaratives according to age – C-test (N = 623) 178

Table 4.20. Cross-tabulation of speakers from El Cibao with regard to expletives in declaratives and interrogatives according to age – B-Test and C-test (N = 102) 181

Table 4.21. Cross-tabulation of speakers from El Cibao with regard to null complementizers in *that*-trace constructions in interrogatives according to age – A-test and B-test (N = 160) 184

Table 4.22. Cross-tabulation of speakers from Santo Domingo with regard to null subjects in declaratives and interrogatives according to level of education –B-test and C-test (N = 1182) 188

Table 4.23. Cross-tabulation of speakers from Santo Domingo with regard to postverbal subjects in interrogatives, according to their level of education. A-test and B-test (N = 1102) 191

Table 4.24. Cross-tabulation of speakers from Santo Domingo with regard to postverbal subjects in declaratives, according to their level of education. C-test (N = 620) 193

Table 4.25. Cross-tabulation of speakers from Santo Domingo with regard to overt expletives, according to their level of education in interrogatives and declaratives. B-test and C-test (N = 102) 195

Table 4.26. Cross-tabulation of speakers from Santo Domingo with regard to overt complementizers in *that*-trace structures, according to their level of education in interrogatives. A-test and B-test (N = 160) 197

Table 4.27. Cross-tabulation of speakers from El Cibao, Santo Domingo and bilinguals with regard to overt subjects in interrogatives and declaratives – B-test and C-test (N = 3758) 200

Table 4.28. Cross-tabulation of speakers from El Cibao, Santo Domingo and bilinguals with regard to person and number in interrogative sentences - B-test (N = 1818) 202

Table 4.29. Cross-tabulation of speakers from El Cibao, Santo Domingo and bilinguals with regard to person and number in interrogative sentences - C-test (N = 1940) 205

Table 4.30. Cross-tabulation of speakers from El Cibao, Santo Domingo, and bilingual with regard to postverbal pronominal and lexical subjects in interrogatives – A-test (N = 1668) 208

Table 4.31. Cross-tabulation of speakers from El Cibao, Santo Domingo, and bilingual with regard to postverbal pronominal and lexical subjects in interrogatives – B-test (N = 1818) 210

Table 4.32. Cross-tabulation of speakers from El Cibao, Santo Domingo, and bilingual with regard to post-verbal pronominal and lexical subjects in declaratives – C-test (N = 1940) 212

Table 4.33. Cross-tabulation of speakers from El Cibao, Santo Domingo, and bilinguals with regard to postverbal subjects with wh-argument and wh- adjunct phrases – A-test. (N = 1115) 214

Table 4.34. Cross-tabulation of speakers from El Cibao, Santo Domingo, and bilinguals with regard to postverbal subjects with wh-argument and wh- adjunct phrases – B-test (N = 1242) 216

Table 4.35. Cross-tabulation of speakers from El Cibao, Santo Domingo, and bilinguals with regard to overt expletives in interrogative and declarative sentences– B-test and C-test (N = 307) 218

Table 4.36. Cross-tabulation of speakers from El Cibao, Santo Domingo and bilinguals with regard to null complementizers in *that*-trace constructions in interrogatives –A-test and B-test (N = 489) 220

Table 4.37. Cross-tabulation of bilingual speakers' data with regard to overt subjects according to language spoken at home in interrogative and declarative sentences –B-test and C-test (N = 1392) 223

Table 4.38. Cross-tabulation of bilingual speakers' data with regard to overt subjects according to language preference in interrogative and declarative sentences –B-test and C-test (N = 1392) 225

Table 4.39. Cross-tabulation of bilingual speakers' data with regard to postverbal subjects according to language spoken at home in interrogative sentences -A-test and B-test (N = 1280) 227

Table 4.40. Cross-tabulation of bilingual speakers' data with regard to postverbal subjects according to language spoken at home in declarative sentences- C-test (N = 697) 228

Table 4.41. Cross-tabulation of bilingual speakers' data with regard to postverbal subjects according to language preference in interrogative sentences -A-test and B-test (N = 1280) 229

Table 4.42. Cross-tabulation of bilingual speakers' data with regard to postverbal subjects according to language spoken at home and language preference in interrogatives – C-test (N = 697) 231

Table 4.43. Cross-tabulation of bilingual speakers' data with regard to overt expletive subjects according to language at home in interrogative and declarative sentences -B-test and C-test (N = 103) 233

Table 4.44. Cross-tabulation of bilingual speakers' data with regard to overt expletive subjects according to language preference in interrogative and declarative sentences -B-test and C-test (N = 103) 235

Table 4.45. Cross-tabulation of bilingual speakers' data with regard to null complementizers according to language spoken at home– A-test and B-test (N = 169) 237

Table 4.46. Cross-tabulation of bilingual speakers' data with regard to null complementizers according to language preference – A-test and B-test (N = 169) 238

Table 4.47. Cross-tabulation of bilingual speakers' with regard to overt subjects according to language contact with CS and GS – in interrogative and declarative sentences -B-test and C-test- (N = 1392) 240

Table 4.48. Cross-tabulation of bilingual speakers' data with regard to postverbal subjects according to language preference in interrogative sentences -A-test and B-test (N = 1280) 241

Table 4.49. Cross-tabulation of bilingual speakers' data with regard to postverbal subjects according to language contact with CS and GS in declarative sentences -C-test (N = 697) 242

Table 4.50. Cross-tabulation of bilingual speakers' data with regard to overt expletive subjects according to language contact with CS and GS in interrogative and declarative sentences -B-test and C-test (N = 103) 243

Table 4.51. Cross-tabulation of bilingual speakers' data with regard to overt complementizers in *that*-trace constructions according to language contact with CS and GS –A-test and B-test (N = 169) 245

Table 4.52. Overview of the final results provided by the three DS groups in the three GJ tasks, according to different linguistic variable 248

Table 4.53. Overview of the final results provided by the three DS groups in the three GJ tasks, according to different social variables 253

Table 4.54. Cross-tabulation of speakers from El Cibao and Santo Domingo with regard to overt and null subjects in interrogatives – Role play (N = 774) 259

Table 4.55. Cross-tabulation of speakers from El Cibao and Santo Domingo with regard to overt and null subjects in declaratives – Personal Story (N = 1956) 260

Table 4.56. Cross-tabulation of speakers from El Cibao and Santo Domingo with regard to overt and null subjects in declaratives – Frog Story (N = 594) 261

Table 4.57. Cross-tabulation of speakers from El Cibao and Santo Domingo with regard to preverbal pronominal and lexical subjects in interrogatives – Role Play (N = 774) 266

Table 4.58. Cross-tabulation of speakers from El Cibao and Santo Domingo with regard to preverbal pronominal and lexical subjects in declaratives – Personal story (N = 1956) 268

Table 4.59. Cross-tabulation of speakers from El Cibao and Santo Domingo with regard to preverbal pronominal and lexical subjects in declarative sentences – Frog story (N = 594) 270

Table 4.60. Cross-tabulation of speakers from El Cibao and Santo Domingo with regard to postverbal pronominal and lexical subjects in interrogatives – Role-play (N = 774) 275

Table 4.61. Cross-tabulation of speakers from El Cibao and Santo Domingo with regard to postverbal pronominal and lexical subjects in statements – Personal Story (N = 1956) 277

Table 4.62. Cross-tabulation of speakers from El Cibao and Santo Domingo with regard to postverbal pronominal and lexical subjects in declaratives – Frog Story (N = 594) 279

Table 4.63. Cross-tabulation of speakers from El Cibao with regard to null subjects, preverbal and postverbal subjects according to age in interrogatives – Role-Play (N = 382) 282

Table 4.64. Cross-tabulation of speakers from El Cibao with regard to null subjects, pre and postverbal subjects according to age in declaratives - Personal Story (N = 956) 286

Table 4.65. Cross-tabulation of speakers from El Cibao with regard to null subjects, pre and postverbal subjects according to age in declaratives – Frog-Story (N = 295) 289

Table 4.66. Cross-tabulation of speakers from Santo Domingo with regard to null subjects, pre and postverbal subjects according to level of education in interrogatives – Role-Play (N = 392) 291

Table 4.67. Cross-tabulation of speakers from Santo Domingo with regard to null subjects, pre and postverbal subjects according to level of education in statements -Personal Story (N = 1000) 294

Table 4.68. Cross-tabulation of speakers from Santo Domingo with regard to null subjects, pre and postverbal subjects according to level of education in statements - Frog Story (N = 299) 297

Table 4.69. Cross-tabulation of DS monolingual (from El Cibao and Santo Domingo) and bilingual speakers with regard to overt and null subjects in interrogatives – Role-Play (N = 1170) 299

Table 4.70. Cross-tabulation of DS monolingual (from El Cibao and Santo Domingo) and bilingual speakers with regard to overt and null subjects in declaratives – Personal story (N = 2956) 300

Table 4.71. Cross-tabulation of DS monolingual (from El Cibao and Santo Domingo) and bilingual speakers with regard to overt and null subjects in declaratives – Frog story (N = 894) 302

Table 4.72. Cross-tabulation of DS monolingual (from El Cibao and Santo Domingo) and bilingual speakers with regard to postverbal pronominal and lexical subjects in interrogatives – Role-Play (N = 1170) 306

Table 4.73. Cross-tabulation of DS monolingual (from El Cibao and Santo Domingo) and bilingual speakers with regard to postverbal pronominal and lexical subjects in declaratives – Personal Story (N = 2956) 310

Table 4.74. Cross-tabulation of DS monolingual (from El Cibao and Santo Domingo) and bilingual speakers with regard to postverbal pronominal and lexical subjects in declaratives – Frog Story (N = 894) 313

Table 4.75. Cross-tabulation of DS monolingual (from El Cibao and Santo Domingo) and bilingual speakers with regard to subjects in Wh-argumental interrogatives – Role-play (N = 460) 317

Table 4.76. Cross-tabulation of bilingual speakers with regard to null subjects according to the language spoken at home in the three oral tasks (Role-play, personal story, and frog story) (N = 5020) 320

Table 4.77. Cross-tabulation of bilingual speakers with regard to null subjects according to the language preference in the three oral tasks (Role-play, personal story, and frog story) (N = 5020) 322

Table 4.78. Cross-tabulation of bilingual speakers with regard to postverbal subjects according to the language preference in the three oral tasks (Role-play, personal story, and frog story) (N = 5020) 324

Table 4.79. Cross-tabulation of bilingual speakers with regard to postverbal subjects according to the language preference in the three oral tasks (Role-play, personal story, and frog story) (N = 5020) 327

Table 4.80. Cross-tabulation bilingual students with regard to overt and null subjects in the three oral tasks, according to their language contact (N = 5020) 330

Table 4.81. Cross-tabulation bilingual students with regard to null, preverbal, and postverbal subjects in the three oral tasks, according to their language contact (N = 3840) 332

Table 4.82. Overview of the final results provided by the three DS groups in the three oral tasks, according to different linguistic variables 335

Table 4.83. Overview of the final results provided by the three DS groups in the three oral tasks, according to different social variables 340

List of figures

Figure 1.1. Different representations of the Extended Projection Principle (EPP) 5

Figure 2.1. Null subjects in GS (adapted from Toribio, 2000a) 47

Figure 2.2. DS, with [- strong] nominal Agr features and [+ strong] nominal T features (Toribio, 2000a) 54

Figure 2.3. Subjects are left-topicalized elements (Ordóñez and Treviño, 1999) 62

Figure 2.4. SV order in GS (Toribio, 2000a) 63

Figure 2.5. VS order in GS (Toribio, 2000a) 64

Figure 2.6. GS wh-questions, Torrego (1984) 68

Figure 2.7. GS wh-questions, Suñer (1994) 69

Figure 2.8. Caribbean wh-questions with preverbal subjects 77

Figure 2.9. DS, with weak nominal Agr features and strong nominal T features (Toribio, 2000a) 88

Figure 3.1. Example items of '*tú*' ('you' singular informal) form in the first GJ task (A-test) 120

Figure 3.2. Example items of '*tú*' ('you' singular informal) form in the A-test, checking the acceptance/ refusal of *that*-trace constructions 121

Figure 3.3. GJ with three options (B-test) 123

Figure 3.4. GJ with expletive ('*ello*') constructions, B-test 124

Figure 3.5. '*That*-trace' construction in GJ with three options, B-test 124

Figure 3.6. GJ in declaratives, C-test 126

Figure 3.7. GJ in declaratives (C-test), with '*ello*' constructions 126

Figure 4.1. Null subjects in interrogative (B-test) and declarative sentences (C-test) by the participants from El Cibao, according to their age-range 173

Figure 4.2. Postverbal subjects in interrogative sentences (A-test and B-test) by the participants from El Cibao, according to their age-range 176

Figure 4.3. Postverbal subjects in interrogative (A-test and B-test) and declarative sentences (C-test) by the participants from El Cibao, according to their age-range 179

Figure 4.4. Overt expletives in interrogative (B-test) and declarative sentences (C-test) by the participants from El Cibao, according to their age-range 182

Figure 4.5. Null complementizers in interrogative sentences (A-test and B-test) by the participants from El Cibao, according to their age-range 185

Figure 4.6. Postverbal and null subjects in interrogative sentences (role-play) by the participants from El Cibao, according to their age-range 283

Figure 4.7. Postverbal and null subjects in declarative sentences (personal story) by the participants from El Cibao, according to their age-range 287

Introduction

Considering the Chomskian proposal of language as a human faculty (1981, 1995, 2002), there is a series of universal principles common to all languages. One of these universal principles is the need for structural subjects. This principle is known as the Extended Projection Principle -EPP. However, there is parametric variation across languages in the realization of the EPP: subjects are obligatorily overt in some languages (as in English); whereas phonologically null subjects are accepted in some other languages (as in most Spanish varieties). Moreover, some scholars (cf. Chomsky, 1981; Rizzi, 1982) consider that the possibility of having null subjects is accompanied by a cluster of some other properties, forming the *pro*-drop parameter. The fulfilment of these *pro*-drop properties determines the parametric value of a language as a [+ *pro*-drop] language (ex. most Spanish varieties), or as a [- *pro*-drop] language (ex. English). Some of the properties considered to be part of this cluster are: the existence of phonologically null subjects, the inversion of the subject and the verb, expletives, and (non-) violation of the *that*-trace filter. However, the existence of this 'cluster' of properties is still under discussion.

This dissertation focuses on one specific Spanish variety: Dominican Spanish (DS). This Caribbean Spanish variety merits special attention because it shows properties normally associated to the two groups of languages named above, i.e. null and non-null subject languages. As Toribio (2000a) notes, the DS variety seems to be in-between two different linguistic grammars, since it shows properties of two distinct parametric values

([+*pro*-drop] and [-*pro*-drop]). This mixed behavior observed in DS is a common characteristic of languages undergoing internal linguistic changes (Roberts, 1993).

Language change can be motivated by different factors: internal and external ones. Some languages experience internal diachronic development (Faarlund, 1999; Silva-Villar, 2004), while in other cases, language change is motivated by external factors such as language contact (Davis, 1971; Kany, 1951; Quirk, 1972; Álvarez Nazario, 1972, 1990).

The main goal of this dissertation is to investigate the effect that external factors (such as language contact) may have on the internal unstable representation of subjects in DS. Consequently, I compare the acceptance and production of these *pro*-drop properties in sixty DS speakers: two groups of DS speakers living on the island –in El Cibao area and in Santo Domingo- (referred to as 'monolinguals'), and a group of DS-English bilinguals living in the United States in a language contact situation. The twenty DS-English bilingual participants living in the U.S. are exposed to input in English, Caribbean Spanish, and other non-Caribbean Spanish varieties.[1] Therefore, the bilingual participants are exposed to input from prototypical null and non-null subject languages (non-Caribbean Spanish and English, respectively), as well as from Caribbean varieties (mixed system: in-between null and non-null subject languages).

Considering linguistic variables and social ones, I analyze the internal representation of subjects of the two groups of monolingual speakers, and I compare these results with those of the bilingual DS-English speakers. Some of the linguistic factors that have been said to affect the overt versus null realization of subjects are the type of sentence in which the subject appears (interrogative versus declarative sentences),

[1] I will refer to the non-Caribbean Spanish variety as General Spanish in this dissertation.

person and number features of the subject, and the pronominal or lexical nature of the subject. On the other hand, I will focus on three main external factors as potentially affecting parametric changes found in DS. These three social variables are: patterns of language use (language comfort level, language used at home, and contact with other languages), age of the participants, and their level of education.

In order to evaluate the type of internal changes taking place in DS, I analyze grammaticality judgments and oral production data of monolingual DS speakers to establish which *pro*-drop properties are in a transitional process among monolinguals. I then compare their results to those of DS-English bilingual speakers living in New Jersey (N.J.). If language contact with English and non-Caribbean Spanish varieties has some influence on the characteristics of the transitional DS variety, then differences between monolingual and bilingual speakers are expected. The analysis of the transitional properties and the effects of input in non *pro*-drop and *pro*-drop languages on an evolving language is an important step in the direction of determining the extent to which *pro*-drop properties form a cluster or not.

Linguistic data and biolinguistic data from the sixty participants were collected and analyzed. Two tasks were used to elicit linguistic data: grammaticality judgments (GJs) and oral reports. These two kinds of linguistic data offer a window into the participants' competence (GJs) and their performance (oral reports). By comparing both types of data, one can obtain a broader picture of the internal representation of subjects by all the participants in the study. The data include interrogative and declarative sentences. Biolinguistic data were collected using a questionnaire on the language history of the participants. Social factors such as age and region in the Dominican Republic are

explored in order to establish the *pro*-drop patterns of DS in the island, and contact with other languages is considered as a variable that could influence the patterns found in bilinguals.

Results show convergence in DS-English bilingual participants in the subject-verb inversion property (i.e., bilingual participants seem to be affected by the SV order), whereas null subjects do not seem to be affected by English. The effects on expletives properties and the violation of the *that*-trace filter were not confirmed and require further research. Therefore, two main suggestions can be posited: 1) the cluster of properties is not such a cluster, or 2) these properties form a cluster, but they are affected differently in a language contact situation.

The dissertation is organized as follows. The first chapter contains the statement of the problem along with the research questions and hypotheses addressed in this study. In the second chapter, I present a review of the literature addressing the four properties of the null subject parameter in the three languages under investigation. In chapter three, I describe the methodology used to develop the study, describing the tasks and participants. In chapter four, I present the results of the data, along with brief explanations about these data. Finally, in chapter five, I conclude with some concluding remarks about the findings, and proposals for future research.

Chapter 1. Null subjects in language change and language contact situations

1.1. Introduction

According to the Chomskian view of language as a human faculty (1981, 1995, 2002), all languages share a series of principles. One of these common principles is the Extended Projection Principle (EPP, henceforth). Roughly defined, this principle states that clauses need a subject in all languages. But this universal principle has different realizations; i.e., it has different parametric values. As illustrated in figure 1.1., the EPP can be divided into two different values: [+ null subject] and [- null subject].

Extended Projection Principle (EPP) → [+ null subject] (Ex. General Spanish, Italian)

Extended Projection Principle (EPP) → [- null subject] (Ex. English, Modern French)

Figure 1.1. Different Representations of the Extended Projection Principle (EPP)

As figure 1.1. above shows, General Spanish (GS, henceforth) belongs to the [+ null subject] group of languages (also called null subject languages), whereas English is considered to be part of the [- null subject] group (also called non-null subject languages). The possibility of having null subjects is thought to cluster with other structural properties, forming what is called the *pro*-drop parameter. A language belongs to one group of languages or another ([+ *pro*-drop] or [- *pro*-drop]) if a series of properties is fulfilled. Among the properties normally attributed to [+ *pro*-drop] languages (Chomsky, 1981) are: 1) null subjects are possible (1.1.a.); 2) subject-verb

inversion is allowed –i.e., SV, VS (1.1.b. and 1.1.c.); 3) expletives must be obligatorily null (1.1.d.); and 4) *that*-trace filter is violated (1.1.e.); i.e., an overt complemetizer ('*que*') is needed.

(1.1.)

a. *Compré manzanas*.
Bought-1sg pret apples
'I bought apples.'

b. *Yo compré manzanas*.
I bought-1sg pret apples
'I bought apples.'

c. *Compré yo manzanas*.
Bought-1sg pret I apples
'I bought apples.'

d. *Llueve.*
Rain-3SG.PRES.
'It rains./It is raining.'

e. *¿Quién dijiste [$_{CP}$ t [$_{C'}$que [$_{IP}$ t cogió el libro?]]]*
Who said-2SG.PRET. that took the book
'Who did you say took the book?'

On the other hand, English is a non-null subject language; i.e., [- *pro*-drop]. English has the following set of features: 1) subjects are obligatorily overt (1.2.a.-b.); 2) subjects are always preverbal; i.e., SV word order (1.2.b.-c.); 3) expletives are obligatorily overt (1.2.d.); and 4) the *that*-filter cannot be violated (1.2.e.); i.e., the complementizer '*that*' is null when a subject is extracted in an interrogative sentence.

(1.2.)

a. * Ø bought apples
'I bought apples.'

b. I bought apples.
'I bought apples.'

c. *Bought I apples.
'I bought apples.'

d. It rains.
'It rains.'

e. Who did you say Ø took the book?
'Who did you say took the book?'

f. *Who did you say that took the book?
'Who did you say took the book?'

GS and English show a prototypical distribution of the *pro*-drop properties.[2] But this clear-cut distribution is shaded in the case of Dominican Spanish (DS). DS is a Spanish variety that shows a mixed selection of the properties attributed to the *pro*-drop parameter. It shares properties with GS-like and with English-like languages. DS exhibits all the properties of GS; i.e., null subjects are allowed (1.3.a.); as well as both SV and VS word order (1.3.b. and 1.3.c.); expletives may remain null (1.3.d.); and the complementizer '*que*' can be used in *that*-trace constructions (1.3.f.). But, at the same

[2] There are some other languages, such as Hebrew, which are partial *pro*-drop languages. (Levy and Vainikka, 1999/2000).

time, DS also shares properties with English-like languages. Among them, DS also allows the overt use of expletives (1.3.e.), and the *that*-trace filter can be violated; i.e., the complementizer can be null (1.3.g.).

(1.3.)

a. *Compré manzanas*.
Bought-1sg pret apples
'I bought apples.'

b. *Yo compré manzanas*.
I bought-1sg pret apples.
'I bought apples.'

c. *Compré yo manzanas*.
Bought-1sg pret I apples.
'I bought apples.'

d. *Llueve.*
Rain-3SG.PRES.
'It rains./It is raining.'

e. *Ello llueve*.
It rains
'It rains.'

f. *¿Quién dijiste [$_{CP}$ t [$_{C'}$que [$_{IP}$ t cogió el libro?]]]*
who said-2SG.PRET. that took the book
'Who did you say took the book?'

g. *¿Quién dijiste [$_{CP}$ t [$_{C'}$Ø [$_{IP}$ t cogió el libro?]]]*
Who said-2SG.PRET. Ø took the book
'Who did you say took the book?'

In DS the same property can be realized in more than one possible way,[3] as in the case of the last two properties named above (use of expletives, and *that*-trace constructions).[4] According to Roberts (1993), having more than one possible representation of the same property is a common feature in languages that are undergoing a linguistic change.

[3] DS is an unstable variety in between 'two distinct grammars,' as shown by Toribio (2000a: 316).
[4] A further discussion of the four properties will be presented in the sections below and in chapter 2.

Language change can be caused by internal and/or external factors, i.e., by linguistic factors or by extralinguistic ones. Discerning which one of these factors is the source of a specific language change constitutes a challenge (Morales, 1986: 29). One of the internal factors that promote language change is the continuous diachronical development of languages[5] (Faarlund, 1999; Silva-Villar, 1996). On the other hand, one of the most propitious external factors promoting language change is language contact[6] (Davis, 1971; Kany, 1951; Quirk, 1972; Alvarez Nazario, 1972, 1990), although language contact may not always cause language change (Morales, 1986). According to Morales (1986: 31 - 32), language contact does not always cause language change:

(1.4.)

> '*O incluso a pesar de una situación de lenguas en contacto, por otras circunstancias no siempre bien conocidas, la lengua de presión puede no ejercer ninguna influencia en un proceso determinado*.'[7]

As noted in the statement above, Morales (1986) considers that language contact (an external factor) does not always lead to language change, or does not influence linguistic changes.

For other scholars, language contact has a real impact in language change, accelerating this process (Schmidt, 1985; Mufwene and Gilman, 1987; Maandi, 1989;

---

[5] This corresponds to studies in historical linguistics.

[6] Thomason and Kaufman (1988: 51) state that 'in general, universally marked features [...] are less likely than unmarked ones to be transferred in language contact.' As Clyne (2003) states, 'they [universally marked features] are less easy to acquire.' The problem is how 'markness' is defined: 'optionality, less elaborate form, less salient, more general meaning, more salient and occurrence in absolute neutralization' (Clyne, 2003: 98).

[7] My translation: Even though they are in a language contact situation, due to other circumstances, not always very well understood, the dominant language may not have any influence on one specific process.

Silva Corvalán, 1994[8]). Clyne (2003) refers to Mufwene and Gilman's (1987) study to explain the structure of Gullah, stating that 'internal changes already in progress in the heartland of the language may be accelerated by external (contact) factors.' (Clyne, 2003: 93).

In order to observe if some external factors (such as language contact) can influence and promote a change in the internal representation of a language, I consider that three steps need to be followed.[9] First, one needs to find a linguistic phenomenon that has diverse realizations in different monolingual varieties ('X^1', 'X^2', etc.) of the same language 'X.' Secondly, it is necessary to focus on the linguistic variety ('X^1') that seems to be undergoing the linguistic changes, and analyze this phenomenon in its monolingual variety. Third, it is necessary to compare this monolingual variety ('X^1') when it is placed in contact with other languages ('Y') or other linguistic varieties ('X^2'), and observe if language contact affects the internal representation of the linguistic phenomenon under study.

These three steps have been followed in this study. As previously stated, GS presents the properties normally attributed to null subject languages, whereas DS shows different possibilities for the same properties (for instance, it allows overt expletives). Therefore, data from monolingual speakers of DS are compared with data from a group of DS speakers living in a language contact situation. DS is placed in a setting where GS, English, and other Caribbean Spanish (CS, henceforth) varieties are present. Following

---

[8] Silva-Corvalán (1994) demonstrates that external factors reinforce or accelerate internal changes that are already in progress by observing the use of auxiliaries in the Spanish of Los Angeles.

[9] I will distinguish between representation and use of the language on the basis of the speakers' competence and performance. I define the speakers' competence as their mental representation of language, and the speakers' performance as their actual production. In chapter 2 and 3, I refer to the participants' representation and use of the language in the different tasks used in the study.

this pattern, it will be possible to observe if external factors, such as language contact, affect the apparent DS 'instability' in the realization of *pro*-drop properties.

This chapter is divided into two main sections: 1.2. and 1.3. In section 1.2., I present a brief introduction to previous analyses of the four properties associated with the *pro*-drop parameter in GS, DS, and English. This brief introduction to the literature will lead to the linguistic research questions and hypotheses pursued in this study. In section 1.3., I address the social factors considered in this study[10] and how they could affect the realization of the *pro*-drop properties. In this latter section, I present the research questions and hypotheses on how some external factors can interfere with the internal linguistic development of a language.

1.2. *Pro*-drop properties

In this section, I present a brief introduction to four of the properties normally ascribed to the *pro*-drop parameter in order to present the linguistic research questions and hypotheses to be discussed in this dissertation. The four properties under investigation are: the allowance or refusal of 1) phonologically null subjects, 2) VS word order, 3) null expletives, and 4) violation of *that*-trace filter. A summary of the properties in GS, DS, and English can be found in table 1.1. below.

[10] In this study, I refer only to structural felicitous conditions where subjects may appear. No reference to discursive factors is made. This latter aspect is left aside for future research.

Table 1.1. *Pro*-drop properties of GS, DS, and English.

Properties	General Spanish	Dominican Spanish	English
Phonologically null subjects	*Compré manzanas.* Bought-1sg.Pret apples 'I bought apples.'	*Compré manzanas.* Bought-1sg.Pret apples 'I bought apples.'	*Bought apples
VS allowed	*Compré yo manzanas.* Bought-1sg.Pret I apples 'I bought apples.'	*Compré yo manzanas.* Bought-1sg.Pret I apples 'I bought apples.'	*Bought I apples
Expletives	*Llueve.* Rain-3SG.PRES. 'It rains./It is raining.'	*Llueve.* Rain-3SG.PRES. 'It rains./It is raining.'	*Rains.
	**Ello llueve.* Expl rain-3SG.PRES. 'It rains./It is raining.'	*Ello llueve.* Expl rain-3SG.PRES. 'It rains./It is raining.'	It rains.
That-trace filter	*¿Quién dijiste <u>que</u> cogió el libro?* Who said-2SG.PRET. that took the book 'Who did you say took the book?'	*¿Quién dijiste <u>que</u> cogió el libro?* Who said-2SG.PRET. that took the book 'Who did you say took the book?'	*Who did you say that took the book?
	**¿Quién dijiste Ø cogió el libro?* Who said-2SG.PRET. that took the book 'Who did you say took the book?'	*¿Quién dijiste Ø cogió el libro?* Who said-2SG.PRET. that took the book 'Who did you say took the book?'	Who did you say Ø took the book?

Table 1.1. presents some of the properties normally associated with the null subject parameter. In it, the cells in white represent those constructions that are not allowed (*) in GS (expletives, and *that*-trace filter), or in English (null subjects –even with expletives-, VS inversion, and violation of *that*-trace filter), but which are allowed in DS.

A difference among the four properties must be noted. In general, languages either have overt expletives or null ones; they violate the *that*-trace filter or they do not, but this is not the case of the other two properties. Specifically, null subjects and VS order are optionally used, although this 'optionality' entails satisfying certain discursive, pragmatic, or structural requirements, as presented in chapter 2.

The properties that form the cluster of properties normally attributed to the *pro*-drop parameter have been the matter of intense debate (Chomsky, 1981; Rizzi, 1982; Liceras, 1988; Hilles, 1986; Hyams, 1986; Serratrice et al., 2004). Chomsky (1982: 241) states that 'when this parameter [the "*pro*-drop parameter"] is set one way or another, the clustering of properties should follow.' However, all the properties enumerated in table 1.1. are not part of the same cluster of properties for some scholars (Hilles, 1986; Hyams, 1986).

In this dissertation I will explore the extent to which these properties form a parameter in monolingual DS, and I will also observe how the representation of these properties is influenced by language contact.

In the following subsections, a description of the four properties is provided. It will present first how these properties appear in GS, then I will present how they are realized in English, and finally, I will present the DS case. The DS variety is presented at

the end because this linguistic variety presents properties of the other two types of languages (GS and English).

Since the first three properties enumerated below are explained using Toribio's (2000a) analysis based on the feature strength of the Tense (T, henceforth) and Agreement (Agr, henceforth) categories, a summary of the nominal and verbal values in T and Agr is presented in table 1.2. below. Toribio's (2000a) analysis will be presented below in detail.

Table 1.2. Grammatical features in GS and in English (Toribio, 2000a).

		Tense	**Agreement**
General Spanish	**Nominal features**	[- strong]	[+ strong]
	Verbal features	[+ strong]	[+ strong]
English	**Nominal features**	[+ strong]	[- strong]
	Verbal features	[- strong]	[- strong]

In the Minimalist account (Chomsky, 1995), only [+ strong] features motivate the overt movement of elements, and they need to be checked off before Spell-Out to avoid ungrammaticality.[11]

1.2.1. Phonologically null subjects

Although all languages need to satisfy the EPP; i.e., all languages need to have a subject, not all languages satisfy this principle in the same way. The phonologically overt realization of subjects in English and GS differs. Although in all languages sentential subjects are structurally required, in some languages they can remain phonologically null

[11] See Chomsky (1995) for further details.

(such as in GS), whereas in other languages their overt expression is required (such as in English). In brief, GS may show phonologically overt subjects, or they can remain null; whereas English needs to have always overtly expressed subjects.[12] However, not all Spanish varieties behave alike. As previously presented, DS shows both overt and null subjects, although they appear in different contexts from GS.

Dialectal variation in the realization of null and overt subjects has been accounted for through syntactic, morphological, and discursive/pragmatic analyses. In chapter 2, I will briefly refer to some of these aspects, such as to the discourse/pragmatic value of subjects, and to role of the morphological realization of the verbal paradigm. However, these two aspects (discursive/pragmatic value of subjects and the morphological realization of the verbal paradigm) are not the main focus of this study.

1.2.1.1. General Spanish

In GS, it is possible to use both, null and overt subjects (examples 1.5.a. and b., respectively).

(1.5.)

a. *Compré manzanas*.
Bought-1ps apples
'I bought apples.'

b. *Yo compré manzanas*.
I bought-1ps apples
'I bought apples.'

From a generativist point of view, and following the minimalist perspective adopted by Toribio (2000a), GS allows null subjects because it has [+ strong] nominal features in Agr (Chomsky, 1981; Jaeggli and Safir, 1989). These [+ strong] nominal features in Agr

[12] See below some rare exceptions ('diary contexts', coordination, etc.)

allow the identification of the null subject. This is in agreement with Rizzi's (1986) and Huang's (1984) original proposals according to which null subjects need to be properly licensed and identified.

1.2.1.2. English

In English only overt subjects are allowed (examples 1.6.a.) whereas null subjects are ungrammatical (1.6.b.).[13]

(1.6.)

a. I bought apples.
b. *Bought apples.

In English, null subjects are not allowed because the EPP is satisfied by merging the subject with the Tense Phrase projection. It has been proposed that T has [+ strong] nominal features (Toribio, 2000a) and the overt pronoun obligatorily merges in [Spec, TP] to check those features (Chomsky, 1995). In English, null subjects are not allowed because Agr is specified with [- strong] nominal features (Toribio, 2000a).

1.2.1.3. Dominican Spanish

In DS, it is possible to have both null and overt subjects (examples 1.7.a. and b.), although the frequency of use and the pragmatic and discursive values may differ from GS. The discursive values of overt and null subjects are briefly discussed in chapter 2 but, as mentioned above, they are not the focus of this dissertation.

[13] In general, in English null subjects are not allowed, although there are some exceptions. For instance, in imperatives, null subjects are expected. Some other instances where null subjects can appear is in 'diary contexts' (Haegeman, 1990), and in some structures (Haegeman, 1997; Zwanziger, Allen and Genesee 2005) such as coordinated clauses, progressive participle constructions, questions with implied second person subjects, and topic drop constructions (see chapter 2 for further details).

(1.7.)

a. *Compré manzanas*.
Bought-1ps apples
'I bought apples.'

b. *Yo compré manzanas*.
I bought-1ps apples
'I bought apples.'

I will follow Toribio's (2000a) proposal that DS exhibits two different grammars: one resembling GS and another resembling English. According to her proposal, on some occasions, DS has [+ strong] nominal features in Agr (as in GS), while on other occasions it shows weak ([- strong]) nominal features in Agr (as in English). These two different options lead to two different results: while the former option allows null subjects, the second option requires overt subjects. Therefore, in the latter option subjects are overtly realized to be properly identified, bearing no pragmatic or discursive role.

To put into perspective the unique situation of DS, it is helpful to look at other languages that have undergone similar internal processes, such as Old and Middle French; or are currently undergoing those processes, such as Brazilian Portuguese (BP, henceforth). These two languages (French and BP) were prototypical null subject languages. Old and Middle French underwent a change from [+ pro-drop] to [- pro-drop], and BP seems to be undergoing the same internal change. According to Adams (1987a, b) and Roberts (1993), in Old French, while the VS property was being lost, a defective system of null subjects appeared,[14] as well as a defective system of identification. Null subjects were restricted in root sentences to first and second person plural subjects, and subjects were identified by [+ strong] features in the case of first and second person

[14] Due to the defective system of null subjects, and to the cliticization process, left-dislocated constructions started to be licensed. In Modern spoken French, left-dislocated subjects also exist: the more informal the speech is, the more frequent left-dislocated subjects are (Barnes, 1986).

plural or through other means (NPs or pronouns, or by previous pragmatic contexts) when they had weak nominal features.

BP also seems to be undergoing an internal parametric change. As in French, diachronic studies of BP (Tarallo, 1983; Berlinck, 1989, 1996; Duarte, 1992, 1993; Lopes Rossi, 1993; Torres Morais, 1993, 1995; Ribeiro, 1994; Cyrino, Duarte, and Kato, 2000) have shown that null subjects have disappeared, as well as the possibility of inverting the subject and the verb. According to Duarte (2000), BP also has a defective system of null subjects that leads to the obligatory use of overt subjects.[15] Duarte (1993, 2000) points out that null subjects stopped being used first with second person subjects, later with first person subjects, and, at present, third person is undergoing this change. Negrão and Müller (1996) and Duarte (1995, 2000) account for the prevalence of phonetically null subjects for third person subjects, by positing that they can be easily recovered and identified by an NP in the previous context. However, Kato (1999) and Duarte (2000) predict that third person non-referential subjects will become overt in BP.

To summarize, DS is a language that appears, like French in the past and BP in the present, to be undergoing a parametric change that affects the nominal values of Agr, and consequently, the stability of null versus overt use of subjects.

[15] The defective sytem of null subjects gave way to the emergence of left-dislocated subjects. These left-dislocated subjects bear no focus and can co-refer with NPs and with other syntactic and adjacent pronouns. Left-dislocated subjects in BP can have definite referents, or they can be indefinites, quantifiers and even arbitrary subjects. See Toribio (2002) for information about focus on clefts in DS.

1.2.1.4. Research questions (RQ) and hypotheses (H)

The previous overview indicates that the main issue that needs to be addressed is whether the value on Agr is [+ strong] or [- strong]. Summarizing, in GS null subjects are allowed due to the [+ strong] nominal value of Agr, but in English they are not allowed due to the [- strong] nominal value of Agr. On the other hand, DS shows both possibilities. On some occasions, it seems to adopt [+ strong] nominal features in Agr, whereas in other occasions, it takes [- strong] ones. Bearing this in mind, the following research questions (RQ, henceforth) and hypotheses (H, henceforth) emerge.

RQ1. Is DS (in its monolingual variety) showing a tendency to adopt the [- strong] nominal features in Agr?

H1. If DS (in its monolingual variety) shows a tendency to adopt the [- strong] nominal features in Agr, then one should encounter a higher percentage of overt subjects than null ones.

RQ2. Does DS (in its monolingual variety) adopt the [+ strong] nominal features in Agr?

H2. If DS (in its monolingual variety) is changing toward the [+ strong] nominal features in Agr, then the percentage of null subjects should be higher than the percentage of overt ones.

As was previously presented, the pattern of null subject loss in BP affected second person subjects first, then first person subjects, but has not reached third person subjects yet, although Kato (1999) and Duarte (2000) predict that non-referential third person subjects will also become obligatorily overt. This fact leads to the following RQ and H.

RQ3. Is DS undergoing the loss of null subjects in the same order in which BP underwent the process?

H3. If DS is undergoing a change toward a [- *pro*-drop] language, similar to that in BP (Duarte, 2000), then the loss of null subjects should follow the same pattern as BP. It should start with second person subjects, continue with first person, and finally reach third person. In other words, DS should start preferring overt subjects in second person, then in first person, and finally in third person. In terms of the nominal values in Agr, this could be translated as a loss of the [+ strong] values and an adoption of the [- strong] ones following the order: 2 > 1 > 3.

Finally, if DS tends towards a [- *pro*-drop] representation of languages, the overt or null realization of subjects in main sentences[16] should not be affected by the sentential structure in which they appear, as it happens in other [- *pro*-drop] languages. That is, overt subjects should appear in declarative and in interrogative sentences. The [- strong] nominal values of Agr will be present in any type of sentence. In the present study, I define declarative sentences as those in which the speaker provides information to the interlocutor. On the other hand, interrogative sentences are defined as sentences in which the speaker requests information from the hearer. This question can be replied with a yes/no answer or with a piece of information. The latter group of interrogative sentences has been called wh-interrogatives, and they may request information about an argument of the verb or about an adjunct of the verb. These sentential differences will be further explained in chapters 2 and 3.

[16] The overt or null realization of subjects is affected by its appearance in main or embedded sentences in Old French or BP (cf. Adams, 1987a).

RQ4. Does DS show a tendency towards the [- strong] nominal value (i.e., obligatorily overt subjects) across all sentential types?

H4. If DS shows a tendency towards a [- strong] nominal feature, this feature should be maintained across all sentential types. Therefore, the percentage of overt subjects should be maintained in both declarative and interrogative sentences.

1.2.2. Verb-subject inversion

Another property that differentiates null and non-null subject languages is the possibility of having a postverbal subject (VS word order). Null subject languages ([+ *pro*-drop]) have been considered to have a relatively free word order. This free word order is more acceptable in declarative sentences, than in interrogatives.[17] On the other hand, word order in non-null subject languages is quite strict, as will be shown below.

1.2.2.1. General Spanish

GS has been considered to have a quite flexible order of constituents. This section briefly presents previous proposals found in the literature on the order of the constituents in declarative and interrogative sentences. In chapter 2, I refer in further detail to these and other analyses of word order in GS. In this section, I focus on the structural analyses proposed to explain the preverbal or postverbal position of subjects.

1.2.2.1.1. Declarative sentences (GS)

Although the order of the constituents in Spanish has been considered very flexible (Givón, 1984; among others), it is not completely arbitrary (Contreras, 1976,

[17] See chapter 2 for further details, such as the strictly V2 position with argumental wh-extraction in GS.

1978; among others), as explained below. In declarative sentences, the two subject positions studied are exemplified below: preverbal (1.8.a.) and postverbal (1.8.b.) ones.

(1.8.)

a. *Yo compré manzanas*. (Preverbal)
I bought-1sg pret apples.
'I bought apples.'

b. *Compré yo manzanas*. (Postverbal)
Bought-1sg pret I apples.
'I bought apples.'

1.2.2.1.1.1. Preverbal subjects in declarative sentences (GS)

Assuming Toribio's (2000a) proposal, the SV order is the result of the verb staying in Agr (which has [+ strong] nominal and verbal features), and the subject rising to [Spec, AgrP], where it checks off the [+ strong] nominal features in Agr. Following standard analyses, I assume that the verb rises to T, and that the subject moves to a higher functional node (Topic/Focus Phrase) when it is marked with the [+ strong] feature in this functional node; i.e., when the subject is pragmatically marked (focalized, topicalized, etc).

1.2.2.1.1.2. Postverbal subjects in declarative sentences (GS)

Postverbal subjects are structurally possible in GS. Toribio (2000a) proposes that VS word order in this variety is derived from the strong/weak nominal and verbal value of Agr and T. She proposes that since Agr and T have [+ strong] verbal features, the verb raises first to Agr, and then to T. On the other hand, since the nominal features of Agr are [+ strong] but the ones in T are [- strong], the subject can only rise up to [Spec, Agr], but

not further. After the appropriate raising of the subject and the verb, the VS word order is obtained.

1.2.2.1.2. Interrogative sentences (GS)

Different factors seem to affect the position of the subjects in interrogative sentences. Some of these factors are the type of interrogative sentence (wh- or yes/no), the syntactic function of the wh-phrase (argumental or adjunct), the pronominal or lexical nature of the subject, and also the person and number features of the subject.

Most studies have addressed the study of wh-questions (questions with *qué* 'what', *quién* 'who', *cómo* 'how', etc.) but not yes/no interrogatives. The types of sentences analyzed in this section are exemplified in 1.9. and 1.10.:

(1.9.) Informative interrogative sentences (wh-interrogatives):

a. ?? *¿Qué tú compraste?*[18]
What you bought-2sg pret
'What did you buy?'

b. *¿Qué compraste tú?*
What bought-2sg pret you
'What did you buy?'

(1.10.) Yes/no interrogative sentences:

a. *¿Tú compraste manzanas?*[19]
you bought-2sg pret apples
'Did you buy apples?'

b. *¿Compraste tú manzanas?*
What bought-2sg pret you apples
'Did you buy apples?'

[18] In the majority of GS dialects, this is ungrammatical, but since some variability may be found, it is not marked as ungrammatical, but with '??.'
[19] This is a pragmatically marked option in GS, but still possible.

Many scholars have also focused their attention on the selection of subjects and their position in wh-interrogative sentences. Several factors constrain the type of subjects allowed and their position in wh-interrogative sentences. As previously presented, among these factors are the pronominal or lexical nature of the subject, and the type of wh-phrase (argumental or adjunct). These different variables will be examined in this dissertation.

In this study, I will adopt the view that in GS, preverbal subjects are barred in [Spec, TP] in interrogative sentences, and that the subject raises to [Spec, Agr], where it checks off its [+ strong] nominal features, as proposed by Toribio (2000a).[20] The position of subjects in interrogative sentences can also be explained by the function of the wh-phrase (wh-argument, and wh-adjunct). In general, according to the Argumental Agreement Licensing Condition (AALC), as proposed by Olarrea (1996), preverbal subjects are more accepted with [- argumental] wh-phrases than with [+ argumental] wh-phrases. That is, in GS, although the norm is having postverbal subjects, preverbal subjects are more acceptable when they appear with wh-words such as '*por qué*' ('why') than with wh-phrases such as '*qué*' ('what'). According to Suñer (1994), the VS order is mandatory in GS, in both argumental and adjunct Wh-Phrases, since they both obey the Wh-Criterion.[21] Goodall (2004) also refers to the acceptance of preverbal subjects in different interrogative sentences (wh-argument versus wh-adjunct) based on the processing load of the subjects in the working memory. According to Goodall (2004: 102), wh-interrogative sentences 'strain the working memory capacity, because the filler (wh-phrase) must be held in working memory until it can be assigned to a gap.'

---

[20] See chapter 2 for in-depth discussion of previous proposals (Suñer, 2003; Goodall, 1999).
[21] See Rizzi (1991) for futher details on the Wh-Crierion.

Specifically, the wh-phrase will be retained until it can find the verb to assign it a function. Therefore, it would be easier for the working memory if no intervening subject appears between the wh-phrase and the verb (i.e., Wh-V-S order); whereas if a preverbal subject appears between them, the working memory will have to retain the wh-phrase longer until it fills the gap.

1.2.2.1.2.1. Postverbal subjects in interrogative sentences (GS)

In GS, interrogative sentences generally require the inversion of the subject and the verb, resulting in a VS order; i.e., postverbal subjects, (Zubizarreta, 1999a; Ordóñez and Treviño, 1999), such as in the following examples.

(1.11.)

a. *¿Qué compraste tú?*
What you bought-2sg pret
'What did you buy?'

b. *¿Compraste tú manzanas?*
You bought-2sg pret apples
'Did you buy apples?'

Following Toribio (2000a), I assume that in GS the verb raises up to T to check off the verbal features in T, but the subject only raises to [Spec, Agr] (also marked with [+ strong] features). However, it cannot raise up to [Spec, TP] due to its [- strong] nominal features.

1.2.2.1.2.2. Preverbal subjects in interrogative sentences (GS)

In GS, overt preverbal subjects are not allowed in interrogative sentences, particularly in wh-questions, although some scholars find exceptions to this

generalization as is briefly explained below, and in chapter 2. The types of sentences are exemplified in 1.12. below:

(1.12.)

a. *¿Qué tú compraste?* (¿Wh-phrase + S + V?)
What you bought-2sg pret
'What did you buy?'

b. *¿Tú compraste manzanas?* (¿S + V?)
You bought-2sg pret apples
'Did you buy apples?'

Some proposals have focused on aspects such as the lexical or pronominal nature of the subject, and the type of interrogative sentence (yes/no versus wh-interrogatives), as well as the syntactic function of the wh-interrogative (wh-argument or adjunct), to explain the (im-) possibility of having preverbal subjects. I will refer to these proposals in chapter 2.

Following Toribio (2000a), I will assume that the impossibility of having preverbal subjects in interrogative sentences in GS derives from the fact that Agr is marked with [+ strong] nominal and verbal features, but T has [- strong] nominal values, therefore the subject can only raise up to [Spec, Agr]. The [- strong] nominal values in TP do not attract the subject to its specifier position, and it must remain in [Spec, Agr]. For that reason, the word order in interrogatives will always be VS, irrespective of the pronominal or lexical nature of the subject, and irrespective of the nature of the interrogative sentence type.

1.2.2.2. English

In English, the only possible order in declarative (1.13.a.) and interrogative sentences is represented in the examples below (1.13.b.-c.).

(1.13.)

a. Mary bought a book.
b. Did Mary buy a book?
c. What did Mary buy?

Following the Minimalist account and, in particular, Toribio's (2000a) proposal, I will assume that in English SV[22] word order can be observed in all sentence types. This SV word order is obtained because the verb does not leave its internal position in VP, whereas the subject leaves its internal VP position attracted by [+ strong] nominal features. In English, the nominal features in T are [+ strong], whereas in Agr they are weak ([- strong]). The [+ strong] features of T promote the raising of the subject to [Spec, TP] to check-off its nominal features.

In this dissertation I will assume that, in English, subject-verb inversion is normally found in interrogative sentences. I will also assume that in English interrogative sentences, subject-auxiliary inversion is required, fulfilling a common verb second phenomenon found in many Germanic languages.[23]

1.2.2.3. Dominican Spanish

Many proposals have been offered to explain the preverbal use of subjects in the CS dialects. Of special interest to this study is the lack of subject-verb inversion in interrogative sentences in DS. In declarative sentences, the basic word order in DS is

[22] Since my study does not focus on English, I am not refering to the position auxiliaries occupy.
[23] See V2 properties of Germanic languages for further information (Haider and Prinzhorn, 1986).

SVO, as in other varieties of Spanish. The main difference between DS and GS is the frequency of overt preverbal subjects.[24] In DS overt preverbal subjects, without any specific pragmatic or discursive value, are more frequent than in GS varieties (Henríquez Ureña, 1940).

In accord with Toribio (2000a), I will consider that DS is in-between two different grammatical systems, with distinct specifications in T and Agr. Therefore, DS has both [+ strong] and [- strong] nominal features in T and Agr. This duality allows speakers of DS to have both the obligatory use of preverbal subjects (when it is marked with [+ strong] nominal features in TP); and the optionality of having preverbal and postverbal subjects, as in the case of GS.[25]

Another factor that should be considered when examining the position of subjects is the processing load that subjects have in CS and, particularly, in DS. Since in DS overt subjects do not seem to have the same discursive and pragmatic value as they have in GS (Contreras, 1989; Toribio, 2000a), Goodall (2004) proposes that the processing load is lighter in CS than in GS. In Goodall's (2004: 104) own words:

(1.14.)

> 'They [overt subject pronouns] should then present a lighter processing load than in standard Spanish, and we thus predict that an intervening subject pronoun in Caribbean Spanish should cause relatively little disruption to processing in a filler-gap structure.'

With respect to the nature of the wh-word (wh-argument versus wh-adjunct), the same restrictions as in GS should be considered in DS, although to a lesser extent. That is, preverbal subjects are more acceptable with wh-adjuncts than in wh-arguments.

---

[24] See chapter 2 for an in-depth discussion.

[25] The optionality of the subject position (preverbal or postverbal) could be explained as having a relaxation of the pragmatic conditions. However, in this dissertation, the pragmatic conditions of subjects are a topic suggested for future research.

1.2.2.4. Research questions (RQ) and Hypotheses (H)

Most of the RQs and Hs concerning the verb-subject inversion property refer to the representation of subjects in interrogative sentences, although declarative sentences are also addressed.

RQ5. Do DS monolingual speakers show a preference for the [- strong] verbal feature in T?

H5. If DS monolingual speakers exhibit a preference for the [- strong] verbal features in T (over the [+ strong] ones), then a higher percentage of overt preverbal subjects (irrespectively of the pronominal or lexical nature of the subjects) should appear in all sentence types, especially in declaratives.[26]

RQ6. Do DS monolingual speakers still have the [+ strong] verbal feature in T available?

H6. If DS monolingual speakers only have the [+ strong] verbal features in T available, postverbal subjects should be used (irrespective of the pronominal or lexical nature of the subjects).

RQ7. Are monolingual DS speakers sensitive to the constraints of subject position with the different wh-interrogatives sentences (wh-argument versus wh-adjunct)?

H7. If the monolingual DS speakers are sensitive to the constraints of the subject position according to the function of the wh-phrase, they will produce a higher percentage of postverbal subjects with wh-argumental interrogatives than with wh-

[26] In general, in GS, preverbal subjects are not accepted in interrogative sentences.

adjunct interrogatives. But, if they are not sensitive to these constraints, the percentage of preverbal subjects in wh-argument interrogatives will also be high.[27]

1.2.3. Expletives

A subject position is always generated in all sentences, satisfying the EPP (Chomsky, 1981, 1982). But languages differ in the way in which non-referential subjects are represented. In some languages, such as GS, expletive subjects are always null, whereas in other languages, such as English, overt expletives are obligatory.

1.2.3.1. General Spanish

In general, sentences, such as the ones in the example 1.15. below, can only be realized with a phonologically null subject in [+ *pro*-drop] languages, such as GS (Rizzi, 1982; Burzio, 1986; Jaeggli and Safir, 1989).

(1.15.)

a. *Llueve*.
Rains-3sgPres.
'It rains.'

b. *Hay pan en la casa*.
Is bread in the house.
'There is some bread in the house.'

[27] This fact can also be linked to the processing load of both types of interrogative sentences. Specifically, if the processing load of wh-arguments is higher than that of wh-adjuncts for DS monolingual speakers, then they will show a higher percentage of overt preverbal subjects with wh-adjunct interrogative sentences than with wh-argumental ones. But, if processing load is not different, then a similar percentage of preverbal subjects should be produced in both kinds of interrogative sentences. However, the processing load variable is not examined in this study.

Considering the nominal features assigned to GS, this linguistic variety has [+ strong] nominal features in Agr, that allow both *pro* and the phonologically null expression of non-referential subjects; i.e., expletives.

1.2.3.2. English

The types of sentences analyzed in this section are exemplified below in (1.16.). As Valian (1990: 106) expresses, "expletive pronouns in English are the words 'it' and 'there', when they have no referential import, but are present only to occupy the subject slot."

(1.16.)

a. It rains.
b. There is some bread in the house.

Unlike GS, English expletives need to be grammatically overt. English has [+ strong] nominal features in T, which results not only in the overt expression of referential subjects, but also in the need to overtly express expletives.

1.2.3.3. Dominican Spanish

Although prototypical null subject languages (such as GS) have null expletives, there are some other non-standard varieties of null subject languages (Catalan, Galician, or European Portuguese) that have overt expletives (Spitzer, 1917, 1920; Bosque and Demonte, 1999; Solà et al. 2002; Álvarez et al., 1986; Uriagereka, 1995; Carrilho, 2005). The possibility of having overt expletives is also found in DS, where the overt expletive '*ello*' can also be used (Henríquez Ureña, 1939, 1940; Jiménez Sabater, 1984; Toribio,

2000a; Hinzelin and Kaiser, 2006). Therefore, in DS we can find sentences such as the examples below.

(1.17.)

a. *Llueve*.
Rains-3sgPres.
'It rains.'

b. *Ello llueve*.
It rains-3sgPres.
'It rains.'

c. *Hay pan en la casa*.
Is bread in the house.
'There is some bread in the house.'

d. *Ello hay pan en la casa*.
There is bread in the house.
'There is some bread in the house.'

According to Toribio (2000a), the optionality of having overt and null expletives in DS is due to the coexistence of two structural representations in this language. DS sometimes behaves as GS and in some other occasions DS is closer to an English-like language. And the main difference between both representations is the specification for nominal features. In GS, Agr has [+ strong] nominal features whereas T has weak ([- strong]) nominal ones (allowing *pro*, and having expletives in non-referential sentences). When DS behaves as GS, non-referential subjects are realized as null subjects; but, when the specification for the nominal features changes (to [+ strong] nominal features in T), an overt expletive '*ello*' appears. In the latter case, Agr is specified with [- strong] nominal features and T is marked with [+ strong] features. As Toribio (2000a: 336) proposes, DS 'is in the process of restructuring' the grammatical representation of subjects. For that reason, one can find sentences such as the ones below:

(1.18.)

a. *Llueve*.
Rains-3ps
'It rains.'

b. *Ello llueve*.
It-3ps rains.
'It rains.'

In addition to its function as impersonal subject, '*ello*' (expletive) has been attributed other different values, that will be presented in chapter 2.

1.2.3.4. Research Questions (R) and Hypotheses (H)

Languages either have overt expletives or not, but, normally they do not exhibit optionality of this property. Since monolingual DS is different from other languages in this respect (overt and null expletives coexist), the following questions and hypotheses are formulated.

RQ8. Are DS monolingual speakers showing a tendency for the [+ strong] nominal value in T in the case of expletive subjects (marked for 3rd person singular but no gender features)?

H8. If DS monolingual speakers show a tendency to adopt the [+ strong] nominal features in T, even with expletive subjects, then overt expletives should appear in interrogative and in declarative sentences.

1.2.4. *That*-trace phenomenon

The *that*-trace filter (Chomsky and Lasnik, 1977) accounts for the (im-) possibility of having a trace (an empty NP) following an overt complementizer in certain

types of wh-questions. This phenomenon was later accounted for by the Empty Category Principle (Chomsky, 1981; Lasnik and Saito, 1984; Chomsky, 1986). This universal principle states that an empty non-pronominal category (such as a trace) needs to be properly governed (Chomsky, 1986; Rizzi, 1990).

1.2.4.1. General Spanish

One of the properties normally attributed to [+ *pro*-drop] languages is the acceptability of constructions that violate the *that*-trace filter (Chomsky, 1981; Jaeggli, 1982; Rizzi, 1982; Jaeggli and Safir, 1989; Kenstowicz, 1989), as in the example below:

(1.19.)

a. ¿Quién dijiste [$_{CP}$ t' [$_{C'}$ que [$_{IP}$ t cogió el libro?]]]
Who said that took the book
'Who did you say took the book?'

b. *¿Quién dijiste [$_{CP}$ t' [$_{C'}$ e [$_{IP}$ t cogió el libro?]]]
Who said took the book
'Who did you say took the book?'

In GS, Comp needs to be filled with *que* (a phonologically overt complementizer), although a trace follows it. According to the Empty Category Principle, the trace (after the movement of a wh-element), needs to be governed, and in GS, and Agr can govern the subject of the embedded sentence.[28]

[28] Further details on the analysis of *that*-trace constructions can be found in Roussou (1993).

1.2.4.2. English

In English, the trace in *that*-trace constructions is not properly governed,[29] as required by the Empty Category Principle (Chomsky, 1981; Lasnik and Saito, 1984; Chomsky, 1986). In English, the subject cannot be extracted when Comp is filled with *that*. For that reason, in English, Comp needs to be empty as in the examples below:

(1.20.)

a. *Who did you say [$_{CP}$ t' [$_{C'}$ that [$_{IP}$ t took the book?]]]
b. Who did you say [$_{CP}$ t' Ø [$_{IP}$ t took the book?]]

In the example 1.20.a. above, the complementizer '*that'* is overtly expressed, which results in the ungrammaticality of the sentence. On the other hand, 1.20.b. does not show an overt complementizer, but a trace, and it is accepted as grammatical.

1.2.4.3. Dominican Spanish

This property (violation of *that*-trace filter) is present in some languages and absent in some others (as it happens with the expletive property); i.e., normally languages do not have the option of violating the *that*-trace filter. But, this is not the case of DS. In some occasions, DS behaves as GS, and in some others, as a non-null subject language (such as English). When it behaves as GS, the overt complementizer is needed; but when it behaves as English, no overt complementizer is allowed. Therefore, in DS, sentences such as the following can be found:

---

[29] As explained by Gathercole & Montes (1997: 76-77) 'the trace in English *that*-trace structures is not properly governed, according to Chomsky (1986), because the Minimality Condition requires that an element be governed by the closest potential governor –here *that* – and *that* is inert for government, so this blocks the higher trace in the Spec, CP, from antecedent government. According to Rizzi (1990), the trace in the Spec, CP, does antecedent govern the trace, but *that* is inert as a governor; in contrast, a null complementizer [...] can be expanded as Agr (when the Spec, CP, is occupied by a wh-operator or trace and the embedded clause is tensed), which can act as a proper head governor.'

(1.21.)

a. *¿Quién dijiste [$_{CP}$ t' [$_{C'}$ que [$_{IP}$ t escribió* <u>*El Quijote*</u>*?]]]*
Who said that wrote <u>The Quixote</u> ?
'Who did you say wrote <u>The Quixote</u>?'

b. *¿Quién dije [$_{CP}$ t' [$_{C'}$ e [$_{IP}$ t trabajó en el turno de noche?]]]*
Who said worked in the shift of night?
'Who did I say worked in the night shift?'

To the best of my knowledge, I did not find any study that focuses on this property of the *pro*-drop parameter (the *that*-trace effect) in DS. Nonetheless, results from a preliminary study I conducted show that DS behaves as both, [+ *pro*-drop] and [- *pro*-drop] languages with respect to this property.

1.2.4.4. Research Questions (RQ) and Hypotheses (H)

RQ9. Do DS monolingual speakers not violate the *that*-trace filter, as in the case of English-like languages?

H9. If DS monolingual speakers do not violate the *that*-trace filter, as in the case of English-like languages, then a high percentage of constructions with a null complementizer should be accepted.

1.3. Social factors

In addition to examining closely the linguistic properties of the *pro*-drop parameter in monolingual DS, as a variety undergoing parametric change, this dissertation focuses on how some social factors interact with the realization of these linguistic properties in monolingual and in DS-English bilingual speakers. The social factors analyzed in order to understand the process of language change are age, level of

education, and geographical area. This is the order in which the social variables are presented in the rest of the chapter. Since monolingual DS seems to be undergoing an internal natural linguistic change, the study of the age factor in the El Cibao area is presented first. Another factor that may interfere with the internal change is the educational level of the participants. Finally, the social factors used to analyze how language contact affects an on-going process of language change are the geographical area (the Dominican Republic versus the U.S.) and patterns of language use by DS-English bilinguals. The different methodologies used to gather the data can also influence the linguistic properties under investigation. Consequently, an analysis of the linguistic data collection methods (grammaticality judgment tasks, or oral reports) will also be presented.

1.3.1. Age

The social variable 'age' was considered only in the case of the DS monolingual speakers from El Cibao, since the speakers from this specific area show some linguistic properties that differ from GS (Henríquez Ureña, 1940; Jiménez Sabater, 1984; Toribio, 2000a). Studying the social factor 'age' in the El Cibao group of speakers may illustrate a change in these properties across generations. In regard to the effect that the participants' age may have, the following research question and hypothesis emerged:

RQ10. In the case of El Cibao speakers, can we find a difference in the acceptance and realization of overt subjects, postverbal subjects, expletives, and in the acceptance of *that*-trace filter violations across age?

H10. If DS speakers from El Cibao are undergoing a process of parametric change, then the older participants will show more null, postverbal, and expletive subjects than the younger ones, as well as higher percentage of violations of the *that*-trace filter.

1.3.2. Level of education

The education level of the participant may interfere with the different realization of the *pro*-drop properties, because of the presence or absence of normative pressures. The level of education was studied only in the Santo Domingo group, since most of the El Cibao participants in my study had a very low educational level, and this factor was maintained fairly balanced in the DS bilingual speakers.

With respect to the influence that the level of education may have on the acceptance of the four *pro*-drop properties, the following research question and hypothesis emerge:

RQ11. Among Santo Domingo speakers, do speakers with a higher level of education have a higher acceptance of null and postverbal subjects as well as null expletives and violations of the *that*-trace filter than the participants with lower educational levels?

H11. If the educational level influences the four properties of the *pro*-drop parameter, then speakers with higher levels of education will show more null and postverbal subjects, as well as less overt expletives and more violations of the *that*-trace filter.

1.3.3. Geographical area

The speakers of this study can be divided into three different geographical areas. Two of them are in the Dominican Republic: El Cibao and Santo Domingo, and they correspond to the monolingual group of speakers; the third one is in the U.S., and corresponds to an area where DS-English bilingual speakers live.

In the Dominican Republic, the El Cibao and Samaná areas have been said to show a higher use of overt preverbal pronouns and of '*ello*' (expletive) than in the rest of the island (Henríquez Ureña, 1939, 1940; Jiménez Sabater, 1984; Toribio, 2000a). This high percentage of overt expletives is not found in the case of Santo Domingo. For that reason, data from the El Cibao and Santo Domingo areas were collected in order to find out the extent to which dialectal variation is related to the instability proposed for DS in previous literature (Toribio, 2000a), and in order to have two sources of comparison with the data from bilingual DS speakers in the U.S. DS bilingual speakers living in the U.S. may be affected by the influence of external factors, such as language contact (see sections that follow).[30] Based on these facts, and considering some of the research questions and hypotheses previously presented (for all the linguistic properties), a new set of questions and hypotheses arise.

RQ12. Do monolingual DS varieties (El Cibao and Santo Domingo) show a higher tendency than bilingual DS in the U.S. to adopt the [- strong] nominal features in Agr?

H12. If monolingual varieties (El Cibao and Santo Domingo) show a higher tendency to adopt the [- strong] nominal features in Agr, then one should encounter in

[30] As previously noted, language contact may be a very important factor accelerating language change.

these monolingual varieties a higher percentage of overt subjects than in the bilingual group of speakers.

RQ13. Do monolingual DS varieties (El Cibao and Santo Domingo) and bilingual DS lose null subjects in the same order (according to the subject in person and number) affecting BP?

H13. If monolingual (El Cibao and Santo Domingo) and bilingual DS varieties show a change close to the one happening in BP (Duarte, 2000), then the order in which the [+ strong] nominal values of Agr is lost will follow this pattern: 2 > 1 > 3 in the Dominican Republic and in the U.S.

RQ14. Do monolingual speakers of DS (in El Cibao and Santo Domingo) have a higher preference for the [+ strong] verbal feature in T than bilingual DS speakers?

H14. If monolingual DS speakers (in El Cibao and Santo Domingo) show a higher preference for the [+ strong] verbal features in T than bilinguals, then the monolingual group will show more postverbal subjects than the bilingual group (irrespective of the pronominal or lexical nature of the subjects).

RQ15. Are monolingual DS speakers (in El Cibao and Santo Domingo) more sensitive to the constraints of subject position with the different wh-interrogatives sentences (wh-argument versus wh-adjunct) than the bilingual speakers?[31]

H15. If the monolingual DS (in El Cibao and Santo Domingo) speakers are more sensitive to the constraints of the subject position according to the function of the wh-

[31] This can also be linked to a difference in the processing load, as suggested by Goodall (2004). Specifically, if monolingual DS speakers (from El Cibao and Santo Domingo) perceive more the difference in the processing load of wh-argument and wh-adjunct phrases than bilinguals, then the monolingual speakers (of either or both groups) will show a higher percentage of overt preverbal subjects with wh-adjunct interrogative sentences than the bilingual DS speakers.

phrase than the bilingual speakers, they will produce a higher percentage of postverbal subjects with wh-argumental interrogatives than the bilingual group.

RQ16. Do monolingual speakers from either El Cibao or Santo Domingo show a higher tendency than bilinguals to adopt the [+ strong] nominal value in T with expletive subjects?

H16. If monolingual DS speakers show a higher tendency to adopt the [+ strong] nominal features in T than bilinguals, even with expletive subjects, then this group will show a higher percentage of overt expletives in all sentence types than the other two groups.

RQ17. Do monolingual speakers of DS show more acceptances of null complementizers in *that*-trace constructions than bilingual speakers?

H17. If monolingual speakers respect the *that*-trace filter more than bilinguals, they will show a higher percentage of constructions with a null complementizer than bilinguals.

1.3.4. Patterns of language use

This social variable is considered only in the case of the DS bilingual speakers, since the DS monolingual speakers live in the Dominican Republic and they usually have no contact with other varieties. Please refer to chapter 3 for further explanation about the methodology and participants of the study. In this variable, three subvariables are considered: language spoken at home, language they felt more comfortable speaking, and the language contact with English and Spanish varieties.

RQ18. Do the language spoken at home and language preference[32] affect the realization of overt subjects?

H18. If the patterns of language use, in this case, language spoken at home and language preference, affect the acceptance and production of null, postverbal, and expletive subjects, then I would expect that those speakers who speak English at home and prefer speaking in English over Spanish would select and accept a higher frequency of overt subjects (even expletives ones), and less postverbal ones than those speakers who prefer Spanish.

RQ19. Does the language spoken at home and language preference affect the realization of null complementizers in *that*-trace constructions?

H19. If the language spoken at home and their language preference affect the use of overt versus null complementizers in *that*-trace constructions, I would expect that those participants who speak English at home and those who prefer speaking English over Spanish would accept more null complementizers in *that*-trace constructions than the ones who speak Spanish at home, and those who prefer speaking in Spanish.

With respect to the language contact, all the DS bilingual speakers have English and DS contact (the latter one, at least, with their parents).[33] Participants also reported their everyday language contact with other Spanish varieties. I divided them in two contact groups: those in contact with other CS varieties (Puerto Rican, Cuban and

[32] When I refer to language preference in the frame of patterns of language use, I refer to the language that the speakers feel more comfortable using.
[33] As presented in chapter 3, the parents of all DS bilingual participants are from the Dominican Republic.

Dominican), and those in contact with what I considered GS (other non-Caribbean varieties). All of them had constant contact with English.[34]

RQ20. Does the language contact with other varieties affect the realization of overt versus null subjects?

H20. If the language contact that DS bilinguals have affects the preference of overt versus null subjects, then, I would expect that those bilingual speakers who have more contact with other Caribbean varieties would have more overt subjects (preverbal, postverbal, and expletives) than the speakers who have mainly contact with other GS varieties.

RQ21. Does the language contact with GS varieties affect the realization of overt complementizers in *that*-trace constructions?

H21. If language contact with GS varieties affects the realization of overt complementizers in *that*-trace constructions, then the groups of participants who reported having more contact with GS varieties should have a low percentage of overt complementizers in *that*-trace constructions.

To summarize, in this chapter I have introduced the research questions and hypotheses that guide the inquiry into language change and language contact proposed in this dissertation. These research questions and hypotheses center around four of the properties ascribed to *pro*-drop languages (availability of null subjects, VS inversion, null expletives and violations of the *that*-trace filter), and around social factors such as age, level of education, geographical area, and patterns of language use. In the next chapter, I will present an overview of the literature on the four properties.

---

[34] The DS bilingual participants were students attending university in the U.S., and they all received constant English input.

Chapter 2. Literature review

2.1. Introduction.

Of its initial formulation of the *pro*-drop parameter, Chomsky (1982: 241) states:

(2.1.)

> 'The optimal assumption, hence the assumption that we will assume to be correct pending evidence to the contrary, is that there is a single parameter of core grammar –the "pro-drop parameter"- that distinguishes Italian-type from French-type languages. When this parameter is set one way or another, the clustering of properties should follow. The language learner equipped with the theory of UG as a part of the initial state requires evidence to fix the parameter and then knows the other properties of the language that follow from this choice of value.'

The original insight that the properties of null subject languages form a cluster has been criticized in the literature (Safir, 1982; Hilles, 1986; Hyams, 1986). This criticism has generated several lines of inquiry into cross-linguistic differences in these properties. In this chapter, I present a review of the literature on four of the properties normally associated with this parameter (phonologically null subjects,[35] subject-verb inversion,[36] expletives, and violation of *that*-trace filter) in an effort to present the theoretical background that has guided previous inquiries into these properties, and their instantiation in GS, English, and DS.

Reviewing the literature of these four properties in GS, English, and DS is of particular relevance, since the main goal of this dissertation is to study the effects that variables (such as language contact) have over the internal representation of sentential subjects, in a language that seems to be already undergoing an internal parametric shift in these properties. Therefore, in this dissertation I will present a study on the effect(s) of

[35] 'Missing subject,' in Chomskian's (1982: 240) terms.
[36] 'Free inversion in simple sentences,' in Chomskian's (1982: 240) terms.

language change on monolingual DS varieties; and the effect(s) of language contact on null subject patterns in DS. In this chapter, I provide an overview of previous works on different aspects of each *pro*-drop property in GS, English, and DS. An overview of these three languages is needed since this dissertation focuses on DS, as spoken in two regions of the Dominican Republic (Santo Domingo and El Cibao) and in the United States. In the latter case, DS is in contact with English, GS, and CS; i.e., DS[37] is the receiving language, whereas English, GS, and CS varieties (Puerto Rican, Cuban, and Dominican) are the source languages. It must be noted that these source languages (English, GS, and CS) behave differently in the realization of subjects; i.e., they have different parametric values ([- *pro*-drop], [+ *pro*-drop], and a mixed[38] system, respectively). This overview of the three linguistic varieties will provide a comprehensive theoretical background for this study.

2.2. Description of the properties

In this section, a review of the literature on four of the properties attributed to the *pro*-drop parameter is presented. The realization of these properties is analyzed in GS, English, and DS; since these are the languages (or linguistic varieties) that are part of the input received by DS bilingual speakers and can affect their representation of the language. The four properties are: null subjects, subject-verb inversion, expletives, and *that*-trace filter.

---

[37] DS under a language contact situation.

[38] Not all Caribbean varieties show a similar acceptance or production of the four properties of the null subject parameter studied in this dissertation. But, since they do not exhibit the exact same values as GS or as English-like languages, I will consider this representation as a 'mixed' system.

2.2.1. Phonologically null subjects

As previously mentioned in chapter 1, in the Chomskian representation of language, one of the principles common to all languages is the EPP. To satisfy this principle all sentences need a structural subject, but not all languages satisfy this principle in the same way. Spanish and English have different restrictions on the phonological expression of subjects (null[39] versus overt) and their position in sentences. Additionally, as was previously presented, some varieties of Spanish have specific restrictions.

2.2.1.1. General Spanish

In *pro*-drop languages (such as in GS), null subjects are allowed. However, null and overt subjects are not in free variation (Fernández Ramírez, 1951; Bello, 1947; Real Acedemia Española, 1991; Pérez-Leroux and Glass, 1997; Zagona, 2002), since it has been argued that they are restricted by structural and pragmatic constraints.

Structurally speaking, null subjects need to be properly licensed and identified (Rizzi, 1986; Huang, 1984). In the case of GS, according to early proposals, null subjects are allowed in finite clauses because the rich morphological inflection of the verb has strong Agr features (Chomsky, 1981; Jaeggli and Safir, 1989). These features permit the identification of the null subject, allowing the [Spec, AgrSP] to remain empty or to not be projected (Speas, 1994; Alexiadou and Anagnostopoulou, 1998). In this dissertation, I will adopt Toribio's (2000a) proposal for GS ('Latin American Spanish' in her terminology). This proposal suggests that null subjects are licensed thanks to the [+

[39] There are two types of *pro*, as proposed by Suñer (1982a), and Lozano (2001): referential *pro* and expletive *pro*. They both have different features. The referential one is optionally dropped in Spanish (Lozano, 2001) and it has [person], [number] and [gender] features. On the other hand, expletive *pro* is obligatorily null in GS and it only has the features of third person singular [3S].

strong] nominal features in Agr, as can be seen in Figure 2.1. adapted from Toribio's (2000a) proposal.[40] Given that in GS the nominal features of Agr are [+ strong] (Toribio, 2000a), *pro* raises to [Spec, Agr] attracted by the [+ strong] features of Agr.

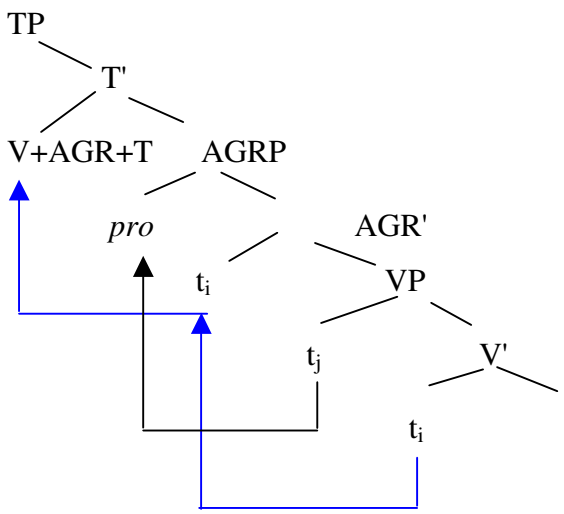

Figure 2.1. Null subjects in GS (adapted from Toribio, 2000a)

In addition to the syntactic conditions that make their licensing possible, phonologically null subjects are subject to pragmatic and morphological constraints, and the nature of the subject (pronominal versus lexical). Although the focus of this study is not the pragmatic and discursive conditions linked to the overt versus null nature of subjects, I will briefly mention that overt subjects contrast in pragmatic value with null subjects in GS (Jaeggli, 1982; Núñez Cedeño, 1983; Montes-Miró, 1986; Luján, 1987; D'Introno, 1989; Silva-Corvalán, 1994; Davidson, 1996; Lipski, 1996; Zubizarreta, 1998; Jandrey Hertel, 2003). As Luján (1999: 1277) points out '*[e]l uso explícito de un*

[40] Toribio's (2000a: 334) proposal for licensing *pro* states that 'The verb raises to check off the verbal features of AGR and TENSE which are strong. As the nominal features of AGR are also strong, verb raising creates the [TENSE+AGR] complex required in the licensing of null subjects. The *pro* subject raises to Spec, AGR, where it checks off strong nominal AGR features; raising of *pro* to Spec, TENSE for Morphological Checking is precluded, as the nominal features of TENSE are weak.'

pronombre personal tónico en posiciones donde su omisión es normal obedece a razones de contraste o énfasis.'[41] In brief, overt subjects tend to mark pragmatic aspects, such as contrastive focus (2.2.a.),[42] emphasize (2.2.b.),[43] and disambiguate possible subject referents –when discourse (2.2.c.) or morphological (2.2.d.) ambiguity arises.

(2.2.)

a. *Yo la llevé, no tú.*
I it-CL took, not you.
'I took it, not you.'

b. *¡¿Tú sola hiciste eso?!*
You alone did that
'Did you do that on your own?!'

c. *Vinieron Pedro y Carmen. Él parecía estar feliz.*
Came Pedro and Carmen. He seemed be happy.
'Pedro and Carmen came. He seemed to be happy.'

d. *Trabajamos mucho las dos. Yo/ella estaba cansada.*
Work hard the both. I/she was tired.
'We both worked hard. I/She was tired.'

In GS, morphological ambiguity arises between first and third person singular of all subjunctive tenses, imperfect indicative and conditional (see Table A.1.1. in appendix 1). While for some authors, morphological ambiguity has been considered to be a very important factor determining the overt production of subjects (Gili Gaya, 1961; R.A.E.,

---

[41] My translation: Using an overt personal pronoun in situations where a null subject is expected is done to indicate contrast or emphasis.

[42] Ocampo (1992: 296) defines an element bearing contrastive focus as 'the constituent that stands in opposition to a closed number of alternatives, members of the same semantic set.' Pérez-Leroux and Glass (1997: p. 151) provide several possibilities for the use of contrastive focus: 'contrastive focus can be used to contrast the referent of the NP to another possible referent, to signal semantic prominence, or simply to call attention to information considered unexpected.'

[43] Zubizarreta (1998: 7) defines emphasis as: "[...] emphasis [...] makes a statement about the truth or correctness of the assertion introduced by its context statement [...]. Emphasis may negate the assertion introduced by its context statement [...] or it may reassert the assertion introduced by its context statement" Montes-Miró (1986: 49) also explains that '*[E]l énfasis es una condición suficiente para la aparición del pronombre, y tanto la intención de establecer un contraste como la de evitar una posible ambigüedad son factores que parecen favorecer que el pronombre se exprese.'* My translation: Emphasis is a sufficient condition for the pronoun to appear, and the intention to establish a contrast as well as that of avoiding some possible ambiguity are factors that favor the overt expression of the pronoun.

1973). For other scholars, this factor was not a strong predictor of the overt expression of subjects (Enríquez, 1984; Barrenechea and Alonso, 1977), even in CS varieties. In favor of the overt use of subjects to clarify verbal ambiguity are Bentivoglio (1987)[44] and Montes-Miró (1986). On the other hand, findings in Enríquez (1984) reveal that verbal ambiguity was not a factor that determined the overt expression of subjects in Madrid. The overt versus null nature of subjects depending on the person and number of the sentential subject has also been a matter of debate, especially in CS varieties (Kany, 1945; Navarro Tomás, 1966; Quirk, 1972; Bergen, 1976; Lipski, 1977). This aspect is further analyzed in a subsection below. In this study, I will focus on the overt versus null nature of subjects according to person and number, but I will not focus on verb morphology per se.

Overt subjects (pronominal and lexical DPs) can appear preverbally or postverbally in declarative sentences,[45] depending on pragmatic and discursive conditions (Jiménez, 1997; Zubizarreta, 1998). For example, postverbal subjects tend to be narrowly focused (Zubizarreta, 1998).[46] When no disambiguation or emphasis is intended, null subjects are preferred over overt ones. In GS, when a new topic is being introduced into the discourse, a lexical DP may be necessary, such as in 2.3. On the other hand, in interrogative sentences, GS does not allow any type of preverbal subjects, a matter that will be the focus of the following section (subject-verb inversion).

---

[44] Bentivoglio (1987) studied the production of pronominal subjects in Caracas.

[45] In natural conversations, the mean of overt subjects in declarative utterances is 30%, according to Grinstead's (2000) study.

[46] According to Zubizarreta (1998: 76), 'sentences with main prominence on the preverbal subject can only have a contrastive (or emphatic) interpretation. In other words, they are appropriate in a situation in which the presupposition is explicitely negated, as indicated by the explicit or implicit presence of the negative tags [...], but not as an answer to a *wh*-question.' She provides the following example (capital letters indicate the prominence):

JUAN llamó por teléfono (no Pedro). (from Zubizarreta, 1998: 76)
Juan phoned.

(2.3.)

Estaban discutiendo, cuando llegó su padre.
Were arguing, when arrived their father.
'They were arguing when their father arrived.'

To summarize, in the literature on null subjects in GS, it has been proposed that null subjects must be licensed and identified in [Spec, AgrP]. They are not in free distribution with overt subjects. Overt subjects are required by discourse conditions such as focus, contrast, and emphasis. They are also used to disambiguate subjects in cases of morphological ambiguity. The pragmatic values attached to the preverbal and postverbal position of subjects in declarative and interrogative sentences will be further discussed in the section 2.2.2.

2.2.1.2. English

In English, overt subjects are grammatically necessary.[47] There are very few cases in which overt subjects are not needed.[48] In this section, I present some accounts that explain why null subjects are not allowed in English.[49] As noted by Rizzi (1994), null

---

[47] Jaeggli and Safir (1989) explain the status of English through the Morphologically Uniformity Principle –MUP. This principle explains that null subjects are only licensed in those languages with a morphologically uniform inflectional paradigm. Since English does not have a fully fledged morphological verbal paradigm, null subjects are not licensed.

[48] Null subjects can be sporadically found in 'diary contexts' in matrix clauses (Haegeman, 1990), athough they are not allowed in embedded clauses (Núñez del Prado *et al*. 1994). According to Haegeman (1997), in English, null subjects are allowed in the following contexts: Coordinated clauses, progressive participle constructions, questions with implied second person subjects, and topic drop. Rizzi (1994) argued that the grammars of diary contexts and in early English grammars, as reported in Haegeman (1990), only contain null subjects in root sentences. According to Rizzi (1994), null subjects can only occur in matrix sentences (a.) and in sentences where the wh-word stays in situ (b.)

a. ___ Buy apples.
b. ___ Buy what?

These null subjects are null constants in Rizzi's terms (1994). For this scholar, null constants are the empty representation of nominals, and not pronominals ([-pronominal, -anaphoric, -variable]). These null categories are identified and licensed from discourse. Cf. Rizzi (1994) for information about null constants and the truncation hypothesis.

[49] Unlike GS, in English, pragmatic values are not expressed through the distinction between overt and null subjects. Some of these values, such as the focalization of elements in a sentence is done using different

subjects are not possible in wh-interrogative sentences (2.4.a.), nor in embedded sentences (2.4.c.), as shown in examples in 2.4.

(2.4.)

a. *What ___ buy?
b. What did you/she buy?
c. * He promised that ___ bought apples.
d. He promised that he/they bought apples.

It has traditionally been assumed that subjects in English are in [Spec, IP] (Haegemann, 1991). In this dissertation I will adopt the split Infl analysis that assumes a T and an Agr projection (based on Chomsky, 1995). English has [- strong] nominal features in Agr, whereas T has [+ strong] nominal features. The [+ strong] features of T attract the subject to [Spec, TP] before Spell-Out, resulting in an overt preverbal subject. The EPP is checked by merging an overt pronominal element in [Spec, TP] (XP-Merge). On the other hand, since Agr has [- strong] [- interpretable] features, null subjects are not possible because *pro* is not licensed.

Some proposals (cf. Toribio, 2000a) point out that GS and English differ in the position of the Agr(eement) Phrase and the T(ense) Phrase. In English, T is lower than Agr (Toribio, 2000a; Chomsky, 1991), but in GS these positions are the opposite: Agr is lower than T. I will not adopt this proposal to account for the difference between English and Spanish. I will adopt the view that the differences lie in the value of features and not in a different hierarchy of functional projections.

---

strategies such as phonetic stress, passive voice, non-referential *there*, *wh*-clefts, left-dislocated structures, and *it*-clefts, as proposed in many English grammars (such as Celce-Murcia and Larsen Freeman's, 1999). Zubizarreta (1998: 47) proposes that, in English, 'it is a property of pronouns that when they bear phrasal stress, they give rise to a contrastive focus meaning associated with them.'

To summarize, in English overt subjects are in [Spec, TP], Agr has weak ([-strong]) nominal features and does not license null subjects. Null subjects in English are only possible in truncated sentences and they can be considered null constants (Rizzi, 1994). Sensitivity to discourse constraints is not expressed in the opposition between overt versus null subjects, but through other intonational and syntactic strategies. The specification for the nominal features will be considered in the analysis of how language contact between DS and English could affect the syntax of DS.

2.2.1.3. Dominican Spanish

CS dialects have been characterized as having overt subjects (especially preverbal ones) differently from other Spanish varieties (Henríquez Ureña, 1940; Jiménez Sabater, 1984; Toribio, 2000a; Montrul, 2004). A high frequency of overt subjects has been noticed in many Caribbean varieties: in DS, this phenomenon was first observed by Henríquez Ureña (1940), who believes that it was imported from Cuba; in Puerto Rican Spanish, it was first observed by Navarro Tomás (1948);[50] and in Cuban Spanish it was first observed by Padrón (1948, 1949a, 1949b). But this phenomenon has not only been observed in the varieties named above (Dominican, Puerto Rican and Cuban). In fact, Kany (1969) points to this phenomenon as emerging in the Antilles, Venezuela, Mexico, and in BP.

Toribio (1993, 2000a) studied DS and argued that "the ways in which dialects differ [...] should perfectly mirror the ways in which languages differ from one other" (Toribio, 2000a: 327); i.e., dialects have to be defined within parametric limits of Universal Grammar.

[50] See also Pérez Sala (1973), Lantolf (1980), Morales (1986), and Cameron (1992).

In Toribio's (1993) previous proposal (framed within the Government and Binding theory), she argued that the instability of CS was due to the specification of Infl. According to her analysis, in CS, Infl can be lexical and non-lexical. When Infl is lexical, nominative case is assigned under government, as in GS. By contrast, when Infl is non-lexical, nominative case is assigned under Spec-head agreement, as in English. This variation may be an indication that DS is undergoing a parametric restructuration. In later work, Toribio (2000a) reformulates her analysis of DS according to the feature strength of T and Agr. In this subsequent analysis, DS has two different realizations of feature strength in Agr and in T. In some cases DS behaves as GS ([+ strong] nominal features in Agr, and [- strong] ones in T), while in others, it behaves more like English ([- strong] nominal features in Agr, and [+ strong] ones in T). This latter option leads to the production of overt preverbal subjects, while the former analysis allows preverbal, postverbal, and null ones. This instability is commonly found in languages that are undergoing changes in their properties (Roberts, 1993). Lizardi (1993) also observed a similar phenomenon among Puerto Rican speakers.[51]

According to Toribio (2000a), null subjects in DS are only possible when DS has the specifications of GS (i.e., [+ strong] nominal features in Agr, and [- strong] nominal features in T). I assume that *pro* is in [Spec, Agr], attracted by the [+ strong] nominal features of Agr proposed by Toribio. On the other hand, when DS is specified with [- strong] nominal features in Agr, the subject NP cannot move to [Spec, Agr], nor null subjects are allowed. Consequently, the subject NP overtly rises to [Spec, TP], as shown in Figure 2.2. below.

---

[51] Lizardi (1993: 89) posed that 'the speech community [Puerto Rican] is linguistically unstable because it is changing as a whole.'

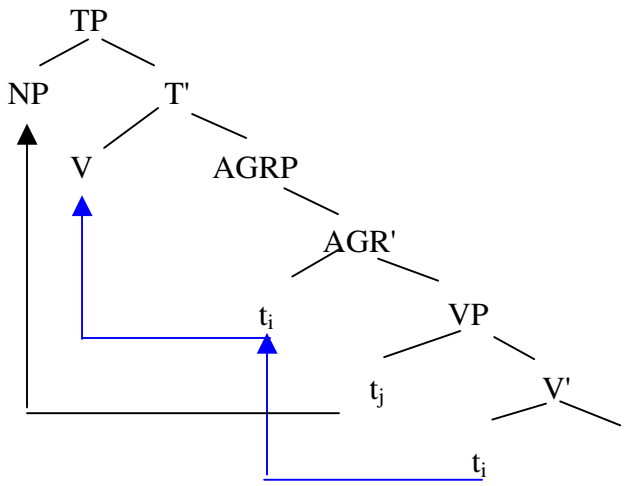

Figure 2.2. DS, with [- strong] nominal Agr features and [+ strong] nominal T features (Toribio, 2000a).

In this study, I also explore the role of person and number to select an overt or a null subject. I will briefly present two accounts proposed in the literature that are based on morphological criteria.[52] These are: The Morphological Uniformity Principle -MUP (Jaeggli and Safir, 1989) and the Functional Compensation Hypothesis –FCH (Hochberg, 1986). The MUP (Jaeggli and Safir, 1989) restricts the licensing of null subjects to those languages with morphologically uniform verbal paradigms (either complex or with no morphology at all, such as GS and Chinese respectively). But, CS, in general, and DS, in particular, have been said to lack some of the morphological endings of the verbal paradigm; i.e., it does not show a fully morphological uniform inflectional paradigm (see appendix 1, table A.1.2). The FCH also references on the loss of morphological endings, such as the final /-s/ common of second person singular.[53] This hypothesis proposes that the inclusion of an overt subject will compensate for the loss of verbal inflexion, since in

[52] See also Quirk, 1972; Lipski, 1977; Hochberg, 1986; Cameron, 1992.
[53] Holm, Lorenzino, and De Mello (1999) consider that DS, especially lower class speakers, also is characterized by the loss of the morphological ending /-n/, typical of third person plural. This loss promotes the overt use of non-emphatic pronominal subjects. A common procedure followed by Afro-Hispanic varieties (cf. Álvarez Nazario, 1974) and creole languages.

these CS dialects it is very common to have a deletion of the morphological verbal ending /-s/[54] that distinguishes second person from other persons (Poplack, 1978; Granda, 1987; López Morales, 1989). Different studies examined this process. Hochberg (1986) studied Puerto Ricans living in Boston, Terrell (1978) and Cameron (1992) studied Puerto Rican speakers on the island;[55] and Alba (1980) and Jiménez Sabater (1977) studied Dominican speakers. But the FCH is not accepted by authors such as Cameron (1992, 1993, 1996), Morales (1986), or Ranson (1991).[56] When the final /-s/ is lost in those varieties, the morphological distinction between the following persons and tenses disappears: Second and third person singular of present and future indicative; and the first, second and, third person in all subjunctive tenses, in the conditional, and in the imperfect indicative (see table A.1.2. in appendix 1 for further details). Therefore, it will be expected that, when the morphological distinction is lost, more overt subjects will be found.

In terms of the discourse value of overt and null subjects, DS speakers seem to freely use overt subjects, without giving them any specific pragmatic or discursive value. Overt subjects in this dialect seem to have lost the discursive value normally associated with overt subjects in GS[57] (Toribio, 2000a; Contreras, 1989; Flores-Ferrán, 2002[58]).

---

[54] And in certain cases also the /-n/ of third person plural, although there is a nasalization of the preceeding vowel.

[55] Cameron (1992) also compares the overt realization of *tú* ('you-sg informal') in cases where the morphological ending was overt and in those in which it did not appear. He even distinguished between specific '*tú*' and non-specific '*tú*' ('you-sg informal'). In all cases, the difference between having an overt morphological ending and not having it did not affect the overt realization of the subject.

[56] Ranson (1991) studied the Spanish spoken in Andalusia, where the /-s/ is elided 91% of the time, and she found that overt subjects were not used to disambiguate the reference of the null pronoun. Overt subjects were used according to their function in discourse, that is, to indicate the referent when it was not contextually clear or in order to maintain a message.

[57] Some of the discursive and pragmatic values of overt subjets are topicalization, focalization, and switch of subjects referents.

Furthermore, since overt subjects in this dialect appear to lack this discursive role, the number of overt subjects has increased with respect to other Spanish varieties. This high use of overt pronouns is characteristic of [- *pro*-drop] languages.

The high frequency of overt subjects (without specific pragmatic and discursive roles) indicates that DS may be changing its representation of sentential subjects. In fact, some other languages seem to have undergone a similar restructuration in their internal representation of subjects. As I previously presented in chapter 1, the changes affecting DS are similar to the internal processes undergone by Old and Middle French, and to the one being experienced by BP nowadays. Old French was a null subject language and it became a non-null subject one; and BP is undergoing this internal parametric change in the present. Old and Middle French went from a [+ *pro*-drop] to a [- *pro*-drop] language (Adams, 1987a, b); and BP seems to be undergoing the same internal shift (Kempchinsky, 1985); i.e., from [+ *pro*-drop] to [- *pro*-drop]. I present now a brief overview of some of the changes undergone by these languages.

Old French lost some of the *pro*-drop properties, such as having null subjects and subject-verb inversion, as reported by Adams (1987a, b) and Roberts (1993), among others. In the beginning, in Old French, pronouns were full NPs/DPs; in Middle French, they became Ds (Dufresne and Dupuis, 1996), and later they became phonological clitics (Adams, 1987 a, b). Vance (1989) notes that while this process in which pronouns became clitics took place, null subjects had a defective system of identification. The defective system of null subjects explained why null subjects were restricted to certain environments. For instance, in root sentences *pro* was only possible for first and second

[58] Flores-Ferrán (2002) refers to this idea when examing the speech of bilingual Puerto Rican speakers, who use overt subjects in non-switch subject environments and, in general, they showed a loss in the discursive value of pronominal subjects.

person plural subjects. On the other hand, the defective system of identification explained the different ways in which subjects were identified. Some subjects were identified by [+ strong] Agr features (first and second person plural), whereas others had weak Agr features and were identified by external NPs or by the pragmatic context.[59]

The low rate of null subjects as well as the lack of subject-verb inversion has also been noted in some diachronic studies of BP (Tarallo, 1983; Berlinck, 1989, 1996; Duarte, 1992, 1993; Lopes Rossi, 1993; Torres Morais, 1995; Ribeiro, 1994; Cyrino, Duarte and Kato, 2000). Similarly to Old and Middle French, BP (Duarte, 2000) shows a defective system of null subjects.[60] According to Duarte (1993, 1995, 2000), the loss of null subjects followed a hierarchical ordered fashion. Duarte's findings show that null subjects stopped being used first with second person subjects, later with first person subjects, and, in the present, third person is undergoing this change. Third person subjects still are null, although Kato (1999) and Duarte (2000) predict that they will become overt when they refer to non-referential subjects. Negrão and Müller (1996) and Duarte (1995, 2000) explain null third person subjects by positing that they are easy to identify. They can be null because they can be easily recovered and identified by an NP in the previous context.

The overt expression of subjects in CS varieties depending on their person and number has also been addressed by many scholars. Álvarez Nazario (1990) pointed out that in the Puerto Rican Spanish variety, first person ('*yo*' and '*nosotros*') pronominal

---

[59] The second option (weak Agr features) is also the case for all subjects in Chinese.

[60] This defective system of null subjecs has lead to the obligatory use of overt subjects, and to the appearance of left-dislocated subjects. In BP, these left-dislocated subjects bear no focus (contrary to GS and to European Portuguese) and can co-refer with NPs and with other syntactic and adjacent pronouns. Furthermore, left-dislocated subjects in BP can refer to a definite, an indefinite, or a quantified referent, as well as an arbitrary subject. In Stantard Spanish or in European Portuguese, these left-dislocated subjects bear focus, and cannot have syntactic adjacents.

subjects were used redundantly.[61] Enríquez (1984), Barrenechea and Alonso (1977), and Rosengren (1974) propose that '*usted*' ('you' sg formal) and '*ustedes*' ('you' plural formal) show the highest rates of overt pronominal subjects. On the other hand, third person subjects (both pronominal and lexical DPs) normally show the lowest rates. Davis (1971) notices that the only pronoun overtly used (in interrogative sentences) is the second person singular '*tú*' ('you sg informal'). Andrade (1930), and Kany (1945) also noted the preverbal position of the pronoun, especially *tú* ('you sg informal'), in interrogative sentences.

To summarize, DS has a dual specification for T and Agr features that generates instability in the availability of null and overt subjects. This instability was also present in Old French and BP. In the latter case, the loss of null subjects follows a hierarchical order according to the person and number of the subject (2 > 1 > 3). A system with the characteristics of DS is then likely to be affected by contact with two diverging systems such as those of English and GS.[62] In this study, I will focus on the structural conditions that allow the licensing of null subjects in monolingual and bilingual DS and on the distribution of overt subjects according to their nature as pronominal or full DPs, in order to determine the extent to which these properties affect DS in contact with GS.

---

[61] Álvarez Nazario (1972, 1990) connected this use with the Spanish used in Canarias.

[62] The instability in features in DS is accompanied by the 'apparent' loss of discourse values associated with overt subjects in other varieties of Spanish and by the impoverishment of the subject morphology paradigm on the verb. These two last aspects are presented in order to provide overall background to the topic although they will not be specifically analyzed in this dissertation because it focuses on the syntactic mechanisms that allow null subjects.

2.2.2. Subject-Verb inversion

In this section, I focus on another property normally included in the cluster of properties forming the *pro*-drop parameter: subject-verb inversion. Null subject languages (i.e., [+ *pro*-drop] languages) allow the word orders SV and VS, although several restrictions apply to them, as I will present below. On the other hand, in non-null subject languages (i.e., [- *pro*-drop] languages), the word order is strict (SV).[63]

Traditional generative analyses assumed that subjects originated in [Spec, IP] where they remain, except in interrogative sentences. However, Koopman and Sportiche (1991) proposed that subjects originate in [Spec, VP], and rise to [Spec, IP]. This hypothesis is called the VP-Internal Subject Hypothesis (ISH, henceforth). Kayne (1994) and Chomsky (1995) propose that VP- internal subjects are generated in all languages as left specifiers of the verbal projection. According to the ISH, the base position of subjects is within the maximal projection of the predicate; i.e., under [Spec, VP]. The preverbal or postverbal position of subjects in the sentence can be explained by the optionality or obligatoriness of the subjects to leave their internal VP position (in [Spec, VP]) or move to [Spec, IP].

2.2.2.1. General Spanish

2.2.2.1.1. Declarative sentences (GS)

In this section I present previous proposals on the preverbal and postverbal position of subjects in declarative sentences.

[63] See Kato (2002) for the partial pro-drop nature of BP and the VS property.

2.2.2.1.1.1. Preverbal subjects in declarative sentences (GS)

SV order has been considered as the basic word order in Spanish and, consequently, the preverbal position as the default position for unmarked subjects (Torrego, 1984). Ocampo (1992: 293) calls this SVO order the 'informational word order.'[64]

In this section I review some of the syntactic proposals that had accounted for SV surface word order in declarative sentences, as well as some basic references to the discursive and pragmatic values normally attached to the preverbal position of subjects.[65]

Some proposals consider that preverbal subjects in declarative sentences are left-dislocated elements (Contreras, 1991; Zubizarreta, 1994; Olarrea, 1996; Ordóñez and Treviño, 1999). For instance, Contreras (1991) and Olarrea (1996: 105) consider them as 'Clitic Left Dislocated constructions, i.e., base-generated adjuncts to the maximal inflection projection coindexed with an empty pronominal in argument position.' Although Olarrea (1996: 106) points out that 'not all preverbal subjects are left-dislocated [...] preverbal negative subjects, nonreferential quantifiers and contrastive focus phrases must occupy a different position from other preverbal constituents.' Following Sportiche (1992, 1998) and Zubizarreta (1999b), Sánchez (2003) proposed that preverbal subjects in GS are in the Spec of a Clitic Phrase (ClP), and the verb moves to the head of the ClP.

Some of the proposals that consider subjects as left-dislocated elements take into account discourse factors, such as topic or focus. According to Suñer (1994)[66] and

---

[64] See also Contreras (1978), Suñer (1982b), Ocampo (1990, 1995), and Gutiérrez-Bravo (2007).
[65] Bentivoglio and Weber (1986: 27) consider that in GS, the SV order is used only when 'the speaker assumes that the subject referent being introduced into the discourse is accessible to the hearer, even in the absence of the previous mention.'
[66] Suñer (1994) proposes that when the subjects are focalized, they remain in their internal position, and the rest of the constituents move to the left.

Zubizarreta (1998), the preverbal word order (SV) is the result of moving the subject up to [Spec, TP]. These subjects bear discourse-related features such as topic, focus, or emphasis. In Zubizarreta's proposal, preverbal subjects are in [Spec, TP], whereas postverbal ones are focalized in VP-internal position. In her analysis, T carries information about T and discourse information, such as topic and focus. Toribio (1993: 41) also pointed out that the SV order 'results from the raising of the subject to [Spec, IP] for theme-rheme considerations.' Furthermore, Zubizarreta (1998: 76) notes that it is possible to have preverbal subjects with contrastive or emphatic interpretations:

(2.5.)

> 'Sentences with main prominence on the preverbal subject can only have a contrastive (or emphatic) interpretation. In other words, they are appropriate in a situation in which the presupposition is explicitly negated, as indicated by the explicit or implicit presence of the negative tags [...], but not as an answer to a *wh*-question.'

The following example from Zubizarreta illustrates this point:

(2.6.)

> *JUAN llamó por teléfono (no Pedro).*
> Juan called by phone (not Pedro).

With respect to the topic value of preverbal subjects, Ordóñez and Treviño (1999) propose that preverbal subjects in declarative sentences of GS are left-topicalized constituents in A'-positions,[67] as can be seen in figure 2.3.:

[67] Refer to some objections to this analysis by Suñer (2003), Goodall (1999), and Camacho (2006).

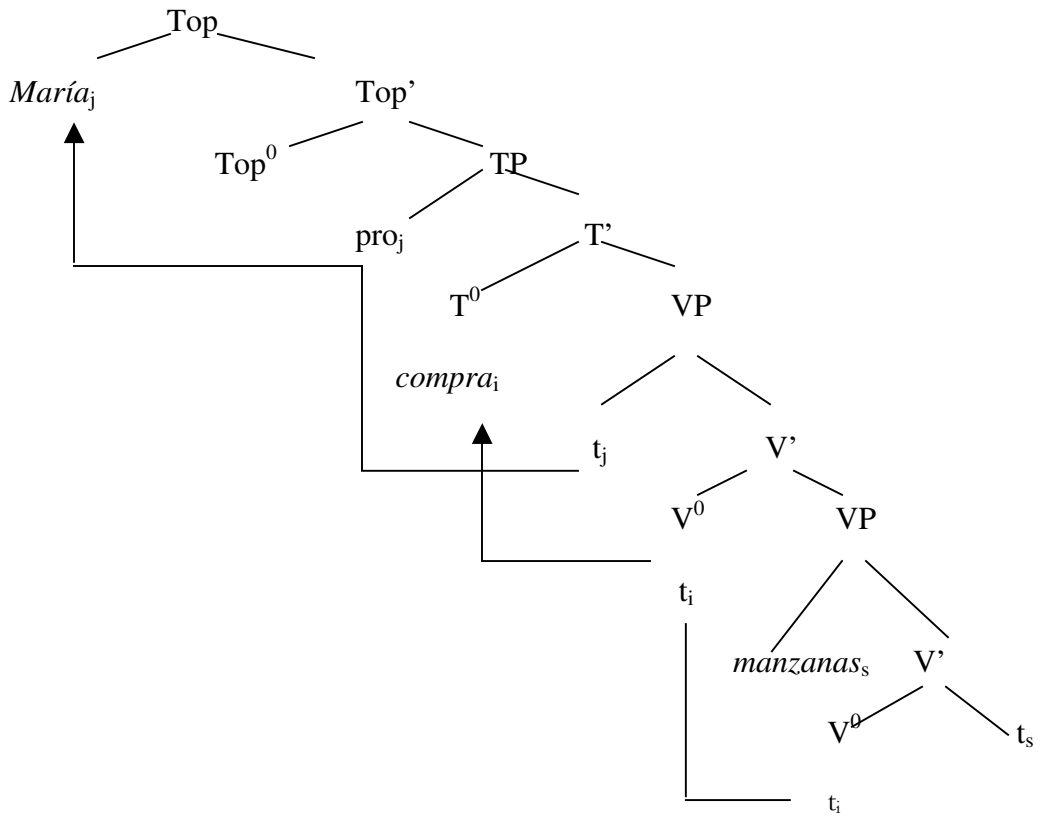

Figure 2.3. Subjects are left-topicalized elements (Ordóñez and Treviño, 1999)

The topic-like interpretation of preverbal subjects was previously noted by Vennemann (1974), who proposed that, in the SVO word order (found in Romance languages), the subject occupies the first position and it is the topic of the sentence.

Finally, I present Toribio's (2000a) analysis of the SV order and my own proposal. According to Toribio's (2000a) account, the SV word order in declarative sentences in GS is the result of the verb staying in Agr (which has [+ strong] verbal features), and the subject raising to [Spec, AgrP], as shown in figure 2.4. below:

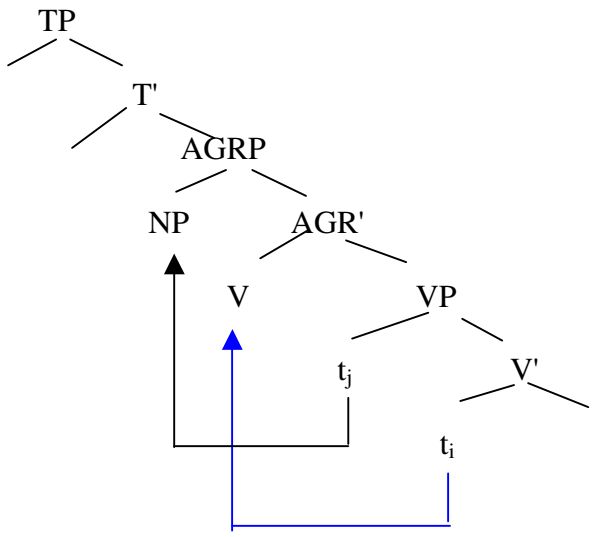

Figure 2.4. SV order in GS (Toribio, 2000a).

I will adopt Toribio's (2000a) proposal to a certain extent. Since T is marked with [+ strong] verbal features, I will consider that, in GS, the verb in declarative sentences raises up to T (to check off the [+ strong] verbal features), and the subject raises to a higher position marked for Topic, Focus, or other contrastive features, as in Ordóñez and Treviño (1999) and Cabré Sanz and Gavarró (2006), among others. In this dissertation, I will not explore in detail which of these pragmatic factors are responsible for the preverbal position of subjects.[68]

2.2.2.1.1.2. Postverbal subjects in declarative sentences (GS)

As mentioned before, languages differ in the optionality or obligatoriness of raising of their internal subject to [Spec, IP]. In the case of GS, this movement is optional, so the subject can remain in [Spec, VP] or rise to another position, such as [Spec, IP], although this movement is not obligatory, as it is in English. This optional

[68] The type of verbs (unaccusative vs. unergative) is not part of this study, since the three GJ tasks used to elicit data only refer to transitive verbs. The realization of subjects with the different verb types is a left for future research. See Du Bois (1987).

raise of the subject leads to different word orders in declarative sentences, as presented in example 2.7.:

(2.7.)

a. [IP *María*$_j$ [I *compra*$_i$] [VP t_j [t_i *manzanas*]]]

María buys-3sg pres apples
'María buys apples.'

b. [$_{IP}$ [$_I$ *compra*$_i$] [$_{VP}$ *María*$_j$ [t_i *manzanas*]]]

buys-3sg pres María apples
'María buys apples.'

According to Toribio (2000a), the VS order is derived in GS after the movement of the verb up to T^0. Under Toribio's (2000a) account, the subject leaves its internal VP-position and is attracted to [Spec, Agr] (marked with [+ strong] nominal features), as can be seen in figure 2.5. In this proposal T has weak ([- strong]) nominal features that do not require rising of the subject. This is the analysis followed in this dissertation, since it allows an appropriate comparison with DS, based on the notion that DS is a mixed system with two possible values for AGR and T.

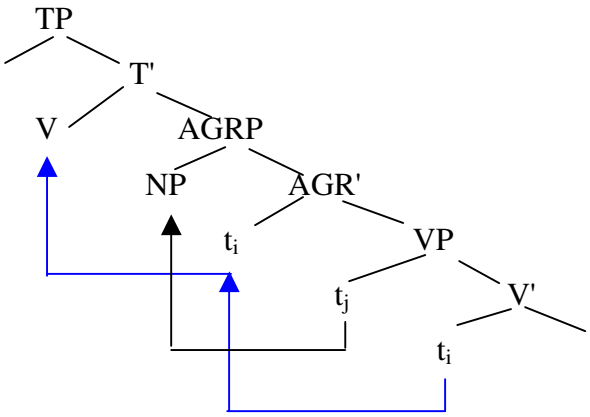

Figure 2.5. VS order in GS (Toribio, 2000a).

In this dissertation, I will test postverbal subjects that are immediately adjacent to the verb, as in the following examples.[69] Therefore, I will be able to test the analysis that proposes that there is a change in progress in the requirement that subjects raise to [Spec, TP] in DS:

(2.8.)

a. *Ellos llevaron muchas medallas de oro al podio*.
They took several medals of gold to the podium
'They took several gold medals to the podium.'

b. *Llevaron ellos muchas medallas de oro al podio*.
Took they several medals of gold to the podium
'They took several gold medals to the podium.'

Although I will not explore in detail the differences in pragmatic values between preverbal and postverbal subjects, I would like to mention that there have been previous proposals that have accounted for the informational value of postverbal subjects in VOS constructions. Suñer (1994), Zubizarreta (1998), Ordóñez (1998b), Gutiérrez-Bravo (2003), among others propose that a postverbal subject in VOS order is the result of the subject remaining in its VP-internal position ([Spec, VP]), whereas the rest of the VP-internal constituents move up to the left. In Zubizarretas's (1998) and Suñer's (1994) proposal,[70] postverbal ones are focalized in VP-internal position; i.e., the subject can be the focalized element remaining in its internal VP position.[71]

The relationship between preverbal and postverbal position of subjects and informational structure was noted in early work by Hatcher (1956). This scholar proposed

[69] Postverbal subjects will be studied in grammaticality judgments and in oral tasks.
[70] In Zubizarretas's (1998) and Suñer's (1994) proposal, preverbal subjects are in [Spec, TP].
[71] This coincides with the proposal that 'focused information is sentence final in Spanish' (Jandrey Hertel, 2003: 280; Ocampo, 1992). In GS, focus is marked with the nuclear accent of the clause, which in Spanish is clause-final (Contreras, 1976; Zubizarreta, 1998; Büring and Gutiérrez-Bravo, 2001).

that SV and VS orders can be explained by the relation that exists between the predication and the context. Bentivoglio and Weber (1986) propose that VS order is used in Spanish to introduce topics into the discourse in subject position. They assume that in GS, the VS word order is a 'presentative device,' which is used to introduce topics into the discourse; i.e., the subject is the topic of the discourse. The placement of the subject in postverbal position marks the focus information (Jandrey Hertel, 2003; Gutiérrez Bravo, 2003).

To summarize, the literature on subject position in declarative sentences in GS distinguishes the syntactic positions occupied by preverbal and postverbal subjects. Preverbal subjects have been analyzed as having moved outside of VP to a higher position, presumably [Spec, AgrP], or even higher in left dislocated structures, whereas postverbal subjects are assumed to be in their original position in [Spec, VP] while other constituents move, generating some differences in pragmatic meanings. In this dissertation, I will adopt Toribio's (2000a) analysis according to which postverbal subjects (VS word orders) in GS are the result of subject raising to [Spec, AgrP] and raising of V to T.

2.2.2.1.2. Interrogative sentences (GS)

In this section, several analyses of preverbal and postverbal subjects in interrogative sentences are presented. Two types of interrogative sentences are analyzed: yes/no interrogatives[72] and informative interrogative sentences (i.e., with a wh-phrase). In this latter group of interrogatives, I will also address the differences in subject position in wh-interrogative sentences with wh-argument and wh-adjunct expressions.

[72] In this study, no hypotheses address yes/no interrogative sentences.

The type of wh-phrase has also been the focus of interest in many studies. They refer to the possibility of having preverbal subjects based on the difference between D-linked and non-D-linked wh-phrases (Olarrea, 1996; Ordóñez and Treviño, 1999; Zubizarreta, 2001; Ordóñez and Olarrea, 2006) and the type of wh-word (argument or adjunct). In Ordóñez and Olarrea's (2006: 72) study, they found that 'complex Wh-words allow non-inversion more readily than simple ones.' They also considered that both the type of wh-phrase (argument or adjunct) and the type of subject affect the possibility of having preverbal subjects. Ordóñez and Olarrea (2006: 68) noticed that 'proper nouns or heavy NPs in preverbal position almost always contain heavy or D-linked or complex Wh-phrases (*Por qué, en qué lugar, cuál de los dos libros, etc.*) instead or simple interrogative words (*qué, cómo, dónde, etc*).'

2.2.2.1.2.1. Postverbal subjects in interrogative sentences (GS)

In interrogative sentences, the unmarked word order of constituents requires subject-verb inversion, resulting in a postverbal subject; i.e., VS order[73] (Zubizarreta, 2001; Ordóñez and Treviño, 1999), as in example 2.9.

(2.9.)

¿Qué haces tú?
What do you-sg. informal?
'What do you do?'

Torrego (1984) proposes that the wh-word moves to [Spec, CP] in wh-questions, and the verb leaves its head position to move to the C^0 position. The subject does not stay in its internal VP position, but it rises to [Spec, IP], where it receives the nominative case by government, as shown in Figure 2.6.:

[73] See also Ordóñez (1998a) for inversion in GS and Catalan.

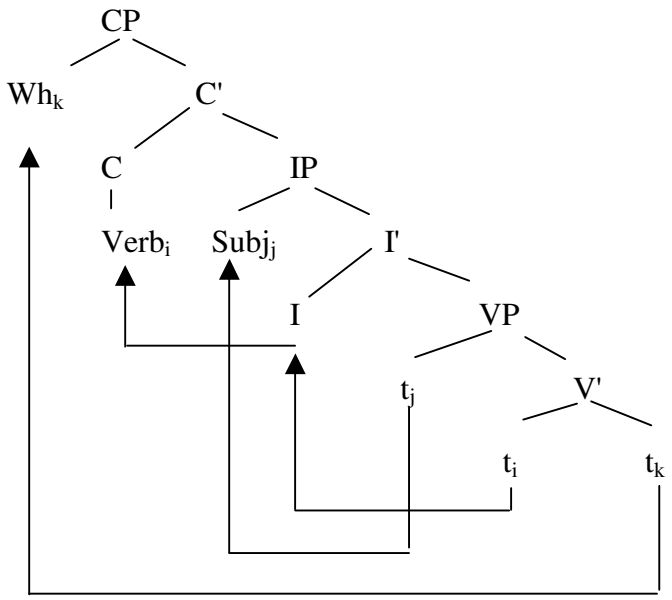

Figure 2.6. GS wh-questions, Torrego (1984)

Torrego (1984) discusses how V-preposing operates in GS, and how the constituents move from its deep structure to its surface structure. The base structure (2.10.b.) of sentence 2.10.a. undergoes *Wh* Movement, yielding 2.10.c. Once the *wh*-pronoun *a quién* ('to whom') is in Comp, V-Preposing applies, generating 2.10.d.[74]

(2.10.)

a. *¿A quién prestó Juan el diccionario?*
To whom lent-3sg pret Juan the dictionary
'To whom did Juan lend the dictionary?'

b. $_{S'}$[[ ] $_S$[*Juan prestó el diccionario a quién*]]
Juan lent-3sg pret the dictionary to whom
'To whom did Juan lend the dictionary?'

c. $_{S'}$[[*a quién*$_k$] $_S$[*Juan prestó el diccionario e*$_k$]]
To whom Juan lent-3sg pret the dictionary
'To whom did Juan lend the dictionary?'

[74] However, Torrego (1984) mentions other wh-phrases that do not require inversion (*en qué medida*, 'to what extent;' *por qué*, 'why;' *cuándo*, 'when;' and *cómo*, 'how').

d. $_{S'}$[[*a quién*$_k$] $_S$[*prestó*$_i$ $_S$[*Juan* $_{VP}$[t_i *el diccionario* e_k]]
To whom lent-3sg pret Juan the dictionary
'To whom did Juan lend the dictionary?'

According to Suñer (1994) –see figure 2.7. below, the Wh-V-Subject order is mandatory in GS, since both argumental and adjunct wh-phrases in GS obey the Wh-Criterion.[75]

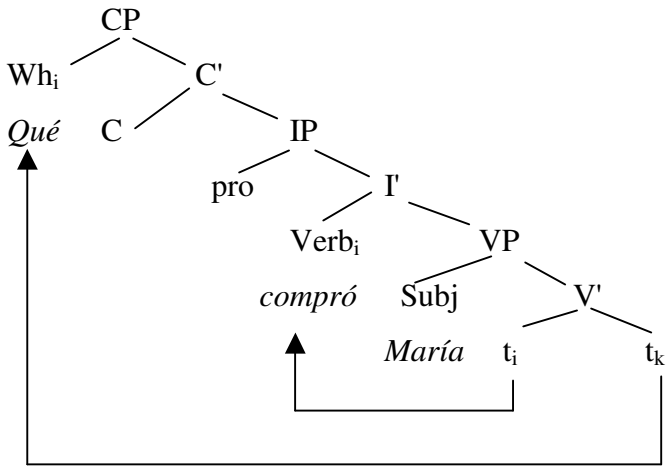

Figure 2.7. GS wh-questions, Suñer (1994)

In Toribio's (1993) analysis of GS,[76] the verb moves from V-to-I, while the subject remains in its [Spec, VP], and the Wh-phrase moves to an A-bar position.

What is common to all these proposals is that the verb moves to I and the wh-word moves to a higher projection ([Spec, CP]). In order to maintain consistency with my adoption of Toribio's (2000a) analysis -that in GS subjects are attracted to [Spec, AgrP] but not to [Spec, TP], I will adopt the view that in wh-interrogatives the verb moves to T or higher to C, the subject is in [Spec, AgrP] and the wh-word moves to [Spec, CP].[77]

[75] The Wh-Criterion refers to the Spec-head relation between a wh-operator and a head specified with [+wh]. Further information about the Wh-Crierion can be found in Rizzi (1991).
[76] In GS, case is assigned by government in this analysis.
[77] Goodall (1999), among others, argued against I-to-C movement of the verb in interrogatives.

2.2.2.1.2.2. Preverbal subjects in interrogative sentences (GS)

In GS, preverbal subjects are not accepted in interrogative sentences. The availability of preverbal subjects in interrogative sentences in GS is determined by the type of interrogative sentence (yes/no and wh-interrogatives) in which they occur, and the syntactic function of the wh-word extracted (argument versus adjunct) in wh-questions. I will address them all in this section.

For yes/no interrogative sentences, Suñer (1994) and Torrego (1984) propose that in GS, both preverbal and postverbal subjects are accepted.[78] Suñer (1994) notes that preverbal and postverbal subjects are permissible in these constructions, because no argumental wh-element is moved. Torrego (1984: 104) posits that 'in the absence of *Wh* Movement, obligatory inversion does not apply. Thus, yes/no questions do not require inversion [...]; nor do sentences containing a non preposed wh-phrase.' Given this availability, I will observe in this dissertation the extent to which preverbal subjects are preferred in monolingual and bilingual DS, and whether they are more frequent than postverbal ones in interrogative yes/no sentences.

In GS wh-interrogative sentences, one of the structural restrictions[79] that dictates the position of the subject is the syntactic function of the wh-phrase (argumental or adjunct). I will briefly sketch two different accounts for the availability of preverbal subjects with wh-questions.

The first account refers to the processing load. Goodall (2004: 110) proposes that 'an intervening subject is disallowed in Spanish wh-questions because of working memory constraints.' According to Goodall (2004: 101) the 'acceptability varies

[78] Interrogatives yes/no with non-inverted subjects require a specific entonation.
[79] The complexity of the wh-phrase has also been considered as another factor that influences the position of the subject in interrogative sentences (Olarrea, 1996; Ordóñez and Treviño, 1999; Zubizarreta, 2001).

depending on the length and D-linking of the subject.' In GS, when an intervening preverbal subject appears, the filler has to be kept in the working memory longer until a gap can be assigned to it. Specifically, when the wh-phrase is argumental,[80] an intervening subject between the wh-phrase and the verb is less acceptable than when the wh-phrase is an adjunct of the verb. In English-type languages, the working load of preverbal subjects seems to be smaller than in GS (Goodall, 2004).[81]

According to the second account, preverbal subjects in GS (SV order) are more acceptable in interrogative sentences with non-argumental wh-phrases (such as *por qué* 'why,' *cuándo* 'when,' *cómo* 'how'), as observed by Torrego (1984). According to Suñer (1994) –see figure 2.7. above, the Wh-V-Subject order is mandatory in GS, since both argumental and adjunct wh-phrases in Spanish obey the Wh-Criterion.[82] These different proposals by Torrego (1984) and Suñer (1994) can be explained if one considers that they are referring to two different varieties of GS.

Olarrea (1996), based on Suñer (1994), proposes that the Argumental Agreement Licensing Condition (AALC)[83] is what dictates the possibility or the impossibility of having preverbal subjects with certain wh-phrases and not with others. The AALC condition is satisfied in GS, because when a wh-phrase is in an argument position, it raises up to [Spec, CP]. Once there, it enters into a Spec-head relationship with the head C, which is also marked [+ arg]. But, when the wh-phrase is non-argumental, it does not

---

[80] According to Goodall (1991), Solà (1992), Arnaiz (1992), and Fontana (1993), in GS interrogative sentences, fronted wh-arguments occupy [Spec, T] ([Spec, I] in Goodall's terms).

[81] Goodall's examples (2004: 107) –Judging scale: 1 'very bad' – 5 'very good'

- *¿Qué Juan leyó en la biblioteca?* Mean rating: 2.130
- *¿Dónde Ana compró el periódico?* Mean rating: 2.957
- *¿Por qué Miguel trabaja tanto?* Mean rating: 4.783

[82] See Rizzi (1991) for futher details on the Wh-Criterion.

[83] See Suñer (1994) and Olarrea (1996) for further details about the Argumental Agreement Licensing Condition (AALC). This condition refers to the constraints of having argument-marked elements together.

have to satisfy the AALC (Suñer, 1994). According to Suñer (1994), non-argumental wh-phrases do not need to satisfy the AALC. For that reason, preverbal subjects are allowed in GS with wh-phrases [- arg]; i.e., preverbal subjects can appear between the wh-phrase and V in Infl, as in (2.11.):[84]

(2.11.)

a. ¿[$_{CP}$ *Por qué*$_k$ C [$_{IP}$ [$_I$ *compró*$_i$ [$_{VP}$ *María* t$_i$ *manzanas* t$_k$]]]]?
-arg +arg
'Why bought-3sg pret María apples
'Why did María buy apples?'

b. ¿[$_{CP}$ *Por qué*$_k$ C [$_{IP}$ *María*$_j$ [$_I$ *compró*$_i$ [$_{VP}$ t$_j$ t$_i$ *manzanas* t$_k$]]]]?
-arg +arg
'Why bought-3sg pret María apples
'Why did María buy apples?'

Suñer's (1994) proposal refers to the type of wh-word that requires inversion, whereas Goodall's (2004) one is also concerned with the type of subject. I will consider Goodall's (2004) processing load proposal to explain the (non-) acceptability of preverbal subjects in interrogative sentences. Please refer to the DS sections below to account for Goodall's (2004) proposal in CS.

Among the pragmatic/discursive restrictions that affect the overt realization of subjects and their position in interrogative sentences is the degree of emphasis over the subject (Bergen, 1976). The lowest degree of emphasis corresponds to null subjects in yes/no and information questions; preverbal and some postverbal subjects correspond to

[84] For an alternative analysis see Zubizarreta (1999b). She analyzes the constraints on preverbal subjects in Romance languages, based on the analysis of clitics and strong Agr. She proposes that many of these languages use these features (clitics and strong agr) to 'externalize' arguments, particularly the subject, without having to use movement. So, Zubizarreta (1999b) proposed that preverbal (nonfocused) subjects in those languages are in Spec of a Cl-operator. When a question is formed, this Cl operator makes the Wh-Phrase move above it to the Spec of the CP projection. Therefore, the wh-features in the Spec of those phrases may fail to filter ('percolate') to the DP.

slight emphasis; subjects in sentence final positions bearing stress correspond to the highest level of emphasis.

To summarize, while most researchers have proposed that preverbal subjects are not allowed in interrogative sentences (yes/no or wh-questions) in GS, others accept some variability in the availability of preverbal subjects in yes/no interrogatives depending on factors such as focus or the dubitative nature of the question. For a majority of researchers, postverbal subjects in wh-questions are derived by movement of the verb and of the wh-word above the subject. These views will become relevant in the discussion of the effects that contact has on the availability of preverbal and postverbal subjects in DS in contact with GS.

2.2.2.2. English (Subject-verb inversion)

In this section, I present the generalized SVO word order in English and I briefly mention some of the mechanisms used in English to mark pragmatic values, such as focus.

Adopting the structural analysis proposed by Toribio (2000a), the English SV word order can be explained by the [+ strong] nominal features in T and the weak ([- strong]) verbal ones. These [+ strong] nominal features in T attract the subject to [Spec, TP]; the [- strong] verbal features preclude verb movement, resulting in the SV word order. This word order holds in declarative and in interrogative sentences.[85]

As was previously explained, word order in GS can mark certain pragmatic and discursive values. Although this is not the most common mechanism to mark focus or

[85] I will not focus here on the additional need for *do-support* in English interrogatives, as I assume that the position of subjects and the main verb remains unaltered by *do-support*.

emphasis in English, use of word order is also a possibility. Some grammars, such as Celce-Murcia and Larsen Freeman's (1999: 611), propose three mechanisms to mark focus and emphasis in English: '(1) phonologically (through special stress and intonation), (2) lexically or nonphonologically (through special word and phrases), and (3) syntactically (through marked word order or special focus constructions).'[86]

To summarize, while some instances of subject-verb inversion with pragmatically marked meanings can be found in English, this language also makes use of other phonological and syntactic strategies to convey focus, creating high levels of stability for a robust SV word order in declarative and interrogative sentences.

2.2.2.3. Dominican Spanish (Subject-verb inversion)

In this section, an overview of the structural analysis of subject-verb inversion in DS in declarative and interrogative sentences is provided, as well as a brief reference to the discursive and pragmatic value of these word orders. Of special interest is how subject-verb inversion functions in interrogative sentences in CS in general, and in more detail for the DS variety. The following examples illustrate the availability of two of the possible word orders in DS:

(2.12.)

a. *Yo compré manzanas*.
I bought-1SG.PRET apples
'I bought apples.'

[86] In order to mark focus in English, two constructions are possible: Subject-Operator inversion, and subject-verb inversion. With the subject-operator inversion, different constituents can be fronted, such as, 'a negative adverbial constituent or an adverbial constituent expressing extent, degree, or comparison [since it] gives a more emphatic or exclamatory reading to the sentence as a whole' (Celce-Murcia and Larsen Freeman, 1999: 614). Ex. 'Never have I seen such a mess!'
If an adverbial constituent is fronted, then subject-verb inversion obtains, as in the following example (from Celce-Murcia and Larsen Freeman, 1999: 614-615). Ex. 'Into the house ran John.'

b. *Compré yo manzanas.*
Bought-1SG.PRET I apples
'I bought apples.'

c. *¿Qué tú compraste?*
What you bought-2sg pret
'What did you buy?'

d. *¿Qué compraste tú?*
What bought-2sg pret you
'What did you buy?'

e. *¿Tú compraste manzanas?*
You bought-2sg pret apples
'Did you buy apples?'

f. *¿Compraste tú manzanas?*
Bought-2sg pret you apples
'Did you buy apples?'

Many different proposals have attempted to explain the source of preverbal subjects in the Caribbean dialects. Among these proposals, there are: English influence (Davis, 1971; Kany, 1945; Navarro Tomás, 1966; Quirk, 1972); the influence of African languages (Quirk, 1972; Kany, 1945); rhythmic stress (Davis, 1971; Bergen, 1976); pronominal subjects becoming clitics (Bergen, 1976; Lipski, 1977; Contreras, 1989; Heap, 1990; Benedicto, 1993); the loss of the null subject parameter (Toribio, 1993; Suñer, 1994); and processing load (Goodall, 2004); among others.

2.2.2.3.1. Preverbal and postverbal position of subjects in declarative sentences (DS)

In declarative sentences, the basic unmarked SV word order (typical of GS) is also found in the DS variety. The main difference between both Spanish varieties (GS and DS) is the frequency in which preverbal subjects are used, and the pragmatic value that these preverbal subjects have. As has been noted previously in the literature (Henríquez

Ureña, 1940), preverbal subjects are more frequent in CS varieties than in GS varieties. Suñer (1982b) considers that there is a structural parallelism between preverbal or postverbal subjects in declarative and interrogative sentences. According to Suñer's proposal, preverbal subjects in interrogative sentences are in [Spec, IP], whereas postverbal ones remain in their base-generated position; i.e., [Spec, VP]. According to that proposal, the different word orders found in interrogative sentences obey a distinction between theme-rheme. In declarative sentences, preverbal subjects (i.e., SV order) are thematical (i.e., their identification is not essential for the communication to continue, they are presupposed), while postverbal ones (i.e., VS) are rhematic[87] (i.e., new elements/information are presented in the communication).

I would like to propose, following Toribio (2000a), that DS speakers appear to have two distinct grammars: one grammar is similar to GS and the other one is similar to English. This proposal of having a duality of grammars is not only based on the *pro*-drop property of having postverbal subjects,[88] but on the observation of how DS addresses other *pro*-drop properties. With respect to the postverbal realization of subjects, when DS has the same feature values for Agr and T as GS, both preverbal and postverbal subjects are possible with its corresponding differences in pragmatic values; whereas when it has the English values, namely, the [+ strong] nominal feature in T, this feature forces the overt movement of the subject to [Spec, TP], resulting in an SV word order.[89]

---

[87] Normally, rhematic elements are NPs. Their overt expression serves to identify them, to emphasize them or to contrast them.

[88] GS also has preverbal and postverbal subjects, and this variety is not considered to have two distinct grammars.

[89] The contrast with GS must be noted, since in GS the movement of the subject to a preverbal position can be driven by discursive factors; whereas, this may be absent in DS.

2.2.2.3.2. Preverbal and postverbal position of subjects in interrogative sentences (DS)

In this section, I present some of the structural explanations for the position of subjects in interrogative sentences in CS.[90] In CS, preverbal subjects in interrogative sentences have been analyzed by Toribio (1993) and Suñer (1994) as the result of the following structural movements: the verb leaves its head position (i.e., V) and moves to the head position I, and the subject leaves its internal base-generated position in [Spec, VP] and moves to [Spec, IP], where it is assigned nominative case under Spec-head agreement.

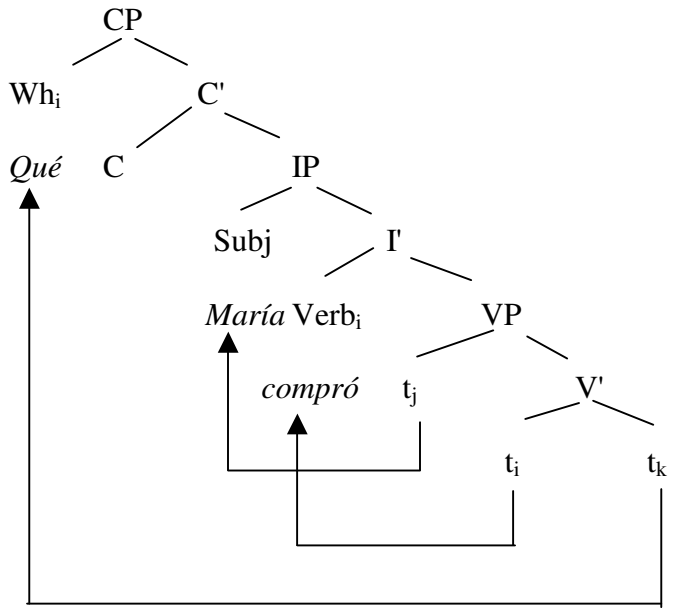

Figure 2.8. Caribbean wh-questions with preverbal subjects

Núñez Cedeño (1983) proposed a negative filter for GS and a more specific one for CS. According to the negative filter in GS (2.13.a), '*se impide la presencia de*

[90]In this study, I do not refer to the position of subjects in indirect questions. In indirect questions, the subject in the embedded sentence is expected to appear postverbally (cf. Hadlich, 1975; Núñez Cedeño, 1983; Torrego, 1984), when Comp is occupied by a wh-phrase.

oraciones con sujeto antepuesto, ya sea éste nominal o pronominal'[91] (Núñez Cedeño, 1983: 55). On the other hand, CS (as observed in 2.13.b) '*es innovador puesto que está en camino de perder el filtro* [above]*, y se destaca por poseer un filtro más específico* [below]'[92] (Núñez Cedeño, 1983: 56):

(2.13.)

a. General Spanish
   a.1. * (Pre) Wh NP VP
   a.2. * *¿Qué María compró?*
   What María bought?
   'What did María buy?'

   a.3. * *¿Qué ella compró?*
   What she bought?
   'What did she buy?'

b. Caribbean Spanish
   b.1. * (Pre) Wh NP VP
   [-Pro]

   b.2. * *¿Qué María compró?*
   What María bought?
   'What did María buy?'

   b.3. *¿Qué ella compró?*
   What she bought?
   'What did she buy?'

In his proposal, pronominal subjects are possible in preverbal position in interrogative sentences of CS, although lexical NPs are not allowed in those cases. With respect to the preverbal position of subjects in interrogative yes/no sentences, Núñez Cedeño (1983: 40-41), proposes that preverbal subjects in these interrogatives, such as the one in example 2.14. below, could be interpreted as an interrogative sentence that shows doubt ('*interrogativa dubitativa*,' in his own terms) or with focus on the subject:

[91] My translation: 'Preverbal subjects either lexical or pronominal are not allowed,.'
[92] My translation: 'It is an innovation since it is in the process of losing the filter [above], and it has a more specific filter [below].'

(2.14.)

¿El hombre estudia?
The man studies
'Does the man study?'

In this dissertation I will explore the extent to which pronouns behave differently from lexical DPs in interrogatives.

With respect to the preverbal position of lexical subjects versus pronominal ones there has also been debate, although, in general, pronominal subjects are more accepted preverbally than other lexical DPs. Some scholars refute the possibility of DPs in preverbal position (Bergen, 1976; Lipski, 1977;[93] Núñez Cedeño, 1983; Contreras, 1989; Heap, 1990), whereas others accept them –see example 2.15.c. below- (Lantolf, 1980; Toribio 1993). Lipski (1977) is more specific in that respect. He rejects the possibility of having proper names in preverbal position in interrogative sentences in CS varieties (2.35.c.). Lantolf (1980) and Toribio (1993) do not agree on this position. For them, preverbal subjects are not restricted to pronominal ones. They note the availability of preverbal proper names in interrogatives. Toribio (1993) specifically notes that there is a wide variety of preverbal DPs that is not limited only to proper names (2.15.d.). Ordóñez and Olarrea (2006: 72) suggest that 'it is possible that this non inversion property of Caribbean is extending from the pronominal system to the DP system for some speakers (a clear minority).'

[93] Lipski (1977) considers that verbal tense is another factor that contributes in the preverbal possibility of subjects in interrogative sentences: present tense is the most favored one, followed by preterit, and finally imperfect.

(2.15.)

(from Lantolf, 1978: 215)

a. *¿Qué yo tengo?*
What I have
'What is the matter with me?'

b. *¿Cuándo nosotros vamos?*
When we go
'When are we going?'

c. *¿Qué Juan tiene?*
What Juan has
'What is the matter with Juan?'

Lipski (1977) argued that, in CS, preverbal subjects became clitics onto the verb, an idea that was recovered by Ordóñez and Olarrea (2006). Bergen (1976), Lipski (1977), Contreras (1989), Heap (1990), and Benedicto (1993) have attributed the possibility of having preverbal subjects in questions in CS to the fact that these subjects become clitics with the verb,[94] forming one phonological unit, and recovering the morphological specifications for person and number lost in the verb. Lipski (1977), who was the first one to consider preverbal pronominal subjects as clitics, referred to this union between the subject and the verb as 'nexus compounds.' Lipski (1977: 64) states this idea of the nexus compounds as:

(2.16.)

> 'The creation of an extraordinarily close bond between the subject pronoun and the verb may therefore cause the two words to behave as one during the transformations as interrogation, which normally entails the separation of two words, thus potentially leading to configurations such as *¿qué* [tutjiéne]?'

This idea developed into the Clitization Hypothesis. Heap (1990: 3) posits:

[94] One problem that this analysis may face is explaining the preverbal position of some pronominal subjects, such as *usted* ('you'sg formal).

(2.17.)

> 'The cliticization hypothesis therefore postulates a series of clitic subject pronouns which, although phonologically identical to the strong pronouns, can be distinguished from them syntactically by their appearance in preverbal position in wh-questions.'

But Suñer and Lizardi (1992) refuted Lipski's idea of cliticized subjects by proving that they could be separated from the verb by negation, and that some pronouns could be stressed (*nosotros* 'we' and *ustedes* 'you-pl formal').

Traditionally, pronouns were considered to be either strong or weak, but Cardinaletti and Starke (1999) and Kato (1999) divided them into three types: strong, weak and clitics. Weak and clitic pronouns will be part of what traditionally were called deficient pronouns. The difference between weak and clitic pronouns is that weak pronouns are maximal projections (just as strong pronouns), and clitic pronouns are heads. Although strong pronouns and weak pronouns are maximal projections, their semantic, syntactic and prosodic behavior is different. According to Cardinaletti (1997), weak pronouns cannot be modified, coordinated, or focalized, and they cannot appear postverbally, nor precede a left-dislocated constituent. After a deep analysis of Caribbean preverbal subjects in interrogative sentences, Ordóñez and Olarrea (2006: 94) propose that:

(2.18.)

> 'Pronominal subjects in C[aribbean] S[panish] are Weak Pronominal in the sense of Cardinaletti and Starke (1999), and Cardinaletti (1997) [and …] that weak pronouns are preverbal. Thus, IP takes along preverbal weak pronouns and certain type of weak adverbials.'

In this dissertation I will test if preverbal subjects have a high frequency in DS interrogatives irrespectively of whether they are pronouns or DPs and if this high frequency is affected by language contact.

As already mentioned, person and number, as well as the realization of the subject as a lexical DP or as a pronoun act as restriction on the preverbal position of subjects in interrogative sentences in CS. As proposed by Ordóñez and Olarrea (2006: 68) singular pronouns are more accepted preverbally than plural ones in interrogative sentences in CS, and the preference for preverbal position in interrogatives ranges from second person as more accepted than first person, and first person more accepted than third person. This coincides with the findings in BP. This same order (second, first, and third) was the one followed by BP when it lost the possibility to have null subjects.

I would like to explore if this sensitivity to person and number might be related to the fact that the change from [- strong] nominal features in T (as in GS) to the [+ strong] ones (as in English) takes place progressively, according to the phi-features of the subject.

Different views on the possibility of having preverbal subjects according to the person and number of the subjects can be found in the literature on CS. For Davis (1971) and Patín Maceo (1940), the only possible preverbal pronoun is '*tú*' ('you'). Quirk (1972), Bergen (1976), Navarro Tomás (1966), Kany (1945), and Lipski (1977) also refer to the preverbal use of '*usted'* ('you' sg formal) and '*ustedes'* ('you' plural formal). First person is also accepted in preverbal position in interrogative sentences, especially the '*yo*' ('I') form (Kany, 1945). On the other hand, Bergen (1976) rejects the use of preverbal '*nosotros*' ('we'). With respect to third person, Lipski (1977) notices third

person preverbal pronouns, such as '*él*' ('he'), '*ella*' ('she'), and '*ellos*' ('they'), although Bergen (1976) rejects them. According to Lipski's (1977) informants, who were Cubans and Puerto Ricans, the preverbal usage was the only 'normal' way to ask a question, since postverbal subjects sounded more poetic to them.

As previously mentioned, processing load is also an aspect that affects the preverbal or postverbal realization of subjects in wh-interrogatives. According to Goodall's (2004) proposal, in CS preverbal subjects 'do not disrupt processing of the filler-gap dependency' (Goodall 2004: 112), as happens in English. Unlike GS, preverbal subjects are accepted in any wh-interrogative sentence. However, Lizardi (1993: 55) explains that CS is 'not indifferent to the +/- argumental distinction,' explaining that preverbal subjects tend to occur with argumental wh-phrases. For Lipski (1977) preverbal subjects can appear with many different wh-phrases; although Davis (1971) proposed that preverbal subjects are mainly found with '*quién'* ('who'), '*por qué'* ('why'), '*cuándo'* ('when'), and '*adónde'* ('to where').

In this dissertation I will explore the potential difference in frequency of preverbal subjects with wh-arguments and wh-adjuncts in DS, and whether these are affected by language contact.

2.2.3. Expletives

In this section, I review some of the main proposals to explain the overt nature of expletives. The following is the definition of expletives and their occurrence by Faarlund (1990: 63):

(2.19.)

> 'An expletive element is a nonreferring word whose function it is to fill an empty slot. There are therefore two prerequisites for the occurrence of expletives in a language in general and for its use in individual sentence tokens: 1) there are positions or syntactic functions that have to be obligatorily filled; and 2) the occupants of these positions have to meet certain requirements.'

Not all languages have the same restrictions with respect to the use of overt or null expletives. According to the EPP, all sentences have a structural subject (Chomsky, 1982); i.e., sentences always generate a subject position, irrespective of their theta role; i.e., even in the case of non-thematic subjects (Chomsky, 1981: 9-10).

(2.20.)

> '[...] nonarguments can occupy the subject position, as in *it is clear that S, I expect [it to be clear that S]*; in fact, the subject position must be filled by a pleonastic element in structures lacking a Θ-marked subject. It seems, then, that the requirement that a clause have a subject is independent of the Project Principle. [...] I will henceforth refer to the Projection Principle along with the requirement that clauses have subjects as the Extended Projection Principle.'

In some languages, this subject position is filled with a null non-referential subject (as in GS),[95] and in some other languages it is filled with an overt expletive (as in English).

According to the historical appearance of expletives, Faarlund (1999) and Silva-Villar (2004) propose that all human languages go through a historical sequence or 'diachronic expletive cycle' created by:

(2.21.)

> '[S]uccessive stages of evolution from a language state with no expletives into a state with topic expletives, and turning from there into a final state with subject expletives' (Silva-Villar, 2004; abstract)

[95] Following Lozano (2001), I will assume that the null expletive in GS is marked only for 3s features.

In order to explain the appearance of expletive subjects, Faarlund (1990: 192) proposes that:

(2.22.)

> 'Once the grammar has an expletive subject at its disposal, there is no longer a need for an expletive topic. A subject can always be topicalized if nothing else can, and at this stage there is always a subject available for the topic position, at least the expletive subject.'

Faarlund (1999: 192-193) provides the following examples to explain the developmental sequence from an empty subject to an expletive topic, and finally an expletive subject (pro-drop > Topic-Exp > Subject-Exp):

(2.23.) by Faarlund (1999: 192)

	An element is topicalized:	
Stage I.	*here is a man-N*	*here has been a man-N*
Stage II.	*here is a man*	*here has a man been*
Stage III.	*there is a man here*	*there has been a man[?]*

In Stage II above, the NP is the subject, whereas in Stage III, *there* becomes the subject, and it follows the finite verb. Silva-Villar (2004) proposes that some languages follow these specific stages of the expletive/*pro*-drop historical sequence, such as French, Germanic languages in general, Northern Iberian languages (Leonese, Catalan,[96] Galician[97]), and Slavic languages (Czech and Serbian).

(2.24.)

Ø-Exp > Topic-Exp > Subject-Exp

[96] Some Catalan varieties also show an expletive element (Spitzer, 1941; Solà et al, 2002), which in certain environments irt has an emphatic role (Solà et al., 2002).
[97] Refer to Carballo Calero (1966), Álvarez (1981, 2001), Álvarez et al (2002), Álvarez Blanco (1986).

2.2.3.1. General Spanish

In null subject languages, such as GS, expletives are normally null (Rizzi, 1982; Burzio, 1986; Jaeggli and Safir, 1989). Alexiadou and Anagnostopoulou (1998) propose that languages can check the EPP by movement of XP (the subject), or by having an inflected verb marked with rich nominal features of person and number (AgrS). In this latter case, the EPP is satisfied by moving the verb to AgrS.

Another proposal to explain null expletives in GS is the impossibility of emphasizing them. In GS, the distinction between overt and null subjects can be linked to a matter of emphasis (Toribio, 1993).

2.2.3.2. English

"Expletive pronouns in English are the words 'it' and 'there,' when they have no referential import, but are present only to occupy the subject slot" (Valian, 1990).

As shown in the examples below, overt expletives are necessary in English (2.25.a.), whereas null expletives results in ungrammaticality (2.25.b.). On the other hand, in [+ *pro*-drop] languages overt expletives are not allowed (2.26.), according to the properties attributed to the *pro*-drop parameter, described by Chomsky (1981), Jaeggli (1982), and Rizzi (1982).

(2.25.)

a. It rains.
b. * Rains.

(2.26.)

Ø llueve.
Ø Rains.
'It rains.'

English-like languages need to have overtly realized expletives, whereas GS-like languages do not.

2.2.3.3. Dominican Spanish

Some varieties of null subject languages (Catalan, Galician, or European Portuguese) have overt expletives (Spitzer, 1917, 1920; Bosque and Demonte, 1999; Solà et al., 2002; Álvarez el al., 1986; Uriagereka, 1995; Carrilho, 2005). This is also the case of DS (Henríquez Ureña, 1939; Jiménez Sabater, 1984; Toribio, 2000a; Hinzelin and Kaiser, 2006), where the use of '*ello*' is always optional. This optionality or this double representation of the same property is typical of languages undergoing a linguistic change (Roberts, 1993).

In the Dominican Republic, the overt expletive '*ello*' is mainly found in the El Cibao and Samaná areas (Henríquez Ureña, 1939, 1940; Jiménez Sabater, 1984; Toribio, 2000a), as in the example below (2.27.).

(2.27.)

Ello llegan guaguas hasta allá. (Toribio 2000a)
There/it arrive buses until there
'There arrive buses there.'

Toribio (2000a: 336) proposes that DS 'is in the process of restructuring' the grammatical representation of sentences. This restructuring can be observed in the appearance of expletives. According to Toribio (2000a), DS shows two different behaviors: one of them is similar to that of GS; while the other one differs from GS. When DS behaves differently from GS it is due to a change in the specification for the nominal features such as the loss of the strong Agr features (Toribio, 1993, 2000a, 2004).

In DS, Agr is specified with weak nominal features, while T has strong features. Having weak nominal features in Agr leads to the overt raising of NP to [Spec, Agr], and the impossibility of having null subjects (since they are not licensed because Agr has no phi-features). On the other hand, having strong features in T triggers overt movement of the NP to [Spec, TP], which is how expletives are licensed in DS.[98]

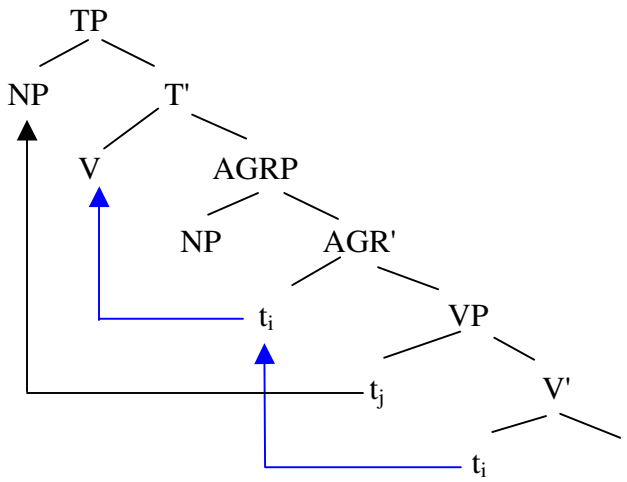

Figure 2.9. DS, with weak nominal Agr features and strong nominal T features (Toribio, 2000a).

Different values have been attributed to the use of the expletive '*ello*' (Henríquez Ureña, 1939, 1940; Jorge Morel, 1978; Jiménez Sabater, 1984; Hinzelin and Kaiser, 2006).[99] Henríquez Ureña (1940: 226-228) proposes that *ello* ('it') can be used as '*sujeto impersonal*, *concesivo o evasivo, para indicar vacilación, probabilidad o aceptación o en aseveraciones enfáticas.*'[100] According to Hinzelin and Kaiser (2006), *ello* ('it') does not

[98] This analysis predicts that no postverbal expletives should be found in DS.
[99] Among the values of *ello* one can find: as an archaism or linguistic fossil (Henríquez Ureña, 1940; Jorge Morel, 1978; Jiménez Sabater, 1984), as an evasive formula, with an impersonal value (Henríquez Ureña, 1940; Jorge Morel, 1978), or a discourse marker (Hinzelin and Kaiser, 2006)
[100] My translation: 'impersonal subject, concesive or evasive, to indicate doubt, probability or acceptance or in emphatic statement.'

function as an expletive subject, but as a discourse marker.[101] According to that, *ello* ('it') fills the preverbal position and it expresses the speaker attitude, such as emphasis (Hinzelin and Kaiser, 2006; Yap, Matthews and Horie, 2004). Hinzelin and Kaiser (2006) note the evolution of '*ello*' ('it') from a pronoun to a discourse marker.[102] Some other theories of expletive creation (Faarlund, 1990; Silva Villar, 1996) predict that *ello* ('it') could possible develop into an expletive.

To summarize, in non-null subject languages, the overt expression of expletives is obligatory, due to the [+ strong] nominal features in T. But in null subject languages, they are normally null. For instance, in GS expletives always remain null, and the EPP is satisfied by moving the verb to AgrS. But in DS (especially in the El Cibao and Samaná areas), expletives can be overt. According to Faarlund (1999) and Silva-Villar (2004), there is a diachronical process in which languages with null expletives become languages with overt expletives. This process is linked to topicalization issues. In this dissertation, I will explore the distribution of overt and null expletives in the monolingual variety of DS and in DS in contact.

2.2.4. *That*-trace effect

The original formulation of the *that*-trace filter (Chomsky and Lasnik, 1977) consisted on the impossibility of having a complementizer followed by a trace (an empty NP) when a wh-element has been extracted out of the subject position.

---

[101] Martín Zorraquino and Lázaro (1999: 4057) define in *Gramática descriptiva de la lengua española* (Bosque and Demonte, 1999) discourse marker as an invariable linguistic element, without any syntactic function in the predicate. Their function in the discourse is guiding the inferences in the communication. For instance, the deontic markers indicate the speaker's attitude, such as if (s)he accepts, refuses, admits, etc what is inferred from the discourse.

[102] This evolution was also attested by Yap, Matthews, and Horie (2004).

Later, this phenomenon was analyzed under the Empty Category Principle (Chomsky, 1981; Lasnik and Saito, 1984; Chomsky, 1986). This universal principle postulates that a trace[103] has to be properly governed by a lexical antecedent or by an antecedent governor (Chomsky, 1986) or by both (Rizzi, 1990).

The fact that some languages allow these constructions while other languages do not has been linked to the cluster of characteristics that form the *pro*-drop parameter (Chomsky, 1981; Jaeggli, 1982; Rizzi, 1982; Jaeggli and Safir, 1989; Kenstowicz, 1989). Specifically, Rizzi (1982) proposed that the violation of the *that*-trace filter depends on the availability of free inversion (VS) in [+ *pro*-drop] languages. Non-null subject languages, such as English, do not allow extracting when Comp is filled (2.28.a.); i.e., Comp has to be empty (2.28.b.). On the other hand, in null-subject languages, such as GS, extraction is possible when Comp is filled (2.28.c.), and it is not possible when Comp is empty (2.28.d.), as the examples below show.

(2.28.)

a. *Who did you say [$_{CP}$ t' [$_{C'}$ that [$_{IP}$ t took the book?]]]
b. Who did you say [$_{CP}$ t' [$_{C'}$ e [$_{IP}$ t took the book?]]]
c. *¿Quién dijiste [$_{CP}$ t' [$_{C'}$ que [$_{IP}$ t cogió el libro?]]]*
Who said that took the book
'Who did you say took the book?'
d. **¿Quién dijiste* [$_{CP}$ t' [$_{C'}$ e [$_{IP}$ t *cogió el libro?*]]]
Who said took the book
'Who did you say took the book?'

In a study on the acquisition of *that*-trace constructions by Spanish and English monolingual and bilingual children, Gathercole and Montes (1997: 92) conclude that 'the results suggest either a lag or a difference in the acquisition of these structures by bilingual children when compared with their monolingual peers.' With respect to the

[103] Or any other empty non-pronominal category.

difference in language, they concluded that the need for a complementizer '*que*' ('that') in Spanish *that*-trace constructions was acquired before by all groups than the obligatoriness to have an empty *that* in English. Gathercole and Montes (1997: 92) note:

(2.29.)

> 'the results suggest that these structures are not acquired, at least in English, until an advanced age, well beyond the ages at which one might expect for an innate principle that has been hypothesized to come on line by the preschool years.'

One possible explanation to account for that difference is the fact that *que* and *that* are used in other constructions. Some of the structures where it can appear are represented in the following examples by Gathercole and Montes (1997: 91):

(2.30.)

a. *Dijiste que Ana fue a México*.
b. * *Dijiste Ana fue a México*.
c. You said that Ana went to Mexico.
d. You said Ana went to Mexico.

(2.31.)

a. *Ana vio al hombre que fue a México*.
b. **Ana vio al hombre fue a México*.
c. Ana saw the man that went to Mexico.
d. *Ana saw the man went to Mexico.

(2.32.)

a. *Ana vio al hombre que enseñé en México*.
b. **Ana vio al hombre enseñé en México*.
c. Ana saw the man that I taught in Mexico.
d. Ana saw the man I taught in Mexico.

As the examples above show, *que* is always needed in Spanish, although in English *that* is optionally used in all cases except for 2.31.d. above. In this latter case,

that is needed since the subject is relativized. For that reason, according to Gathercole and Montes (1997), the input is clearer for Spanish sentences (always use '*que*' –'that'-).

2.2.4.1. General Spanish

In null subject languages, such as GS, one can extract an element when Comp is filled with *que* (2.33.a.), but when Comp is empty (2.33.b.) no extraction is possible, or if allowed, it is an awkward option.

(2.33.)

a. *¿Quién dijiste* [$_{CP}$ t' [$_{C'}$ *que* [$_{IP}$ t *cogió el libro?*]]]
Who said that took the book
'Who did you say took the book?'

b. **¿Quién dijiste* [$_{CP}$ t' [$_{C'}$ e [$_{IP}$ t *cogió el libro?*]]]
Who said took the book
'Who did you say took the book?'

In the examples above, the sentence is grammatical in GS when the complementizer '*que*' ('that') is overt, but when there is no overt complementizer, the sentence is ungrammatical, as in example 2.33.b. above.

2.2.4.2. English

While in GS, an overt Comp is needed after extraction; English does not allow extracting a subject from a position when Comp is filled with *that* (2.34.a.); i.e., Comp has to be empty (2.34.b.):

(2.34.)

a. *Who did you say [$_{CP}$ t' [$_{C'}$ that [$_{IP}$ t took the book?]]]
b. Who did you say [$_{CP}$ t' Ø [$_{IP}$ t took the book?]]

According to the ECP (Chomsky, 1981; Lasnik and Saito, 1984; Chomsky, 1986), the trace has to be properly governed[104] (Chomsky, 1986; Rizzi, 1990). But in English, the trace in *that*-trace constructions is not properly governed. According to Chomsky (1986), the example 2.34.a. above is ungrammatical because it violates the minimality condition. Therefore, if the head of CP (i.e., C) is immediately dominated by C,' this C' blocks the government of the subject trace by the antecedent in [Spec, CP], as it can be observed in example 2.35.a. below:

(2.35.)

a. *Who did you say [$_{CP}$ t' [$_{C'}$ that [$_{IP}$ t took the book?]]]
b. Who did you say [$_{CP}$ t' Ø [$_{IP}$ t took the book?]]

On the other hand, the example 2.35.b. above is grammatical. In this case, there is no head of CP (i.e., there is no C) and, as a result, the C' is not necessarily projected. For this reason, there is no barrier to govern the subject trace by its antecedent in [Spec, CP].

2.2.4.3. Dominican Spanish

With respect to this last property of the *pro*-drop parameter (the *that*-trace filter) not many studies have looked into this property in the Dominican dialect. My preliminary results show that DS behaves both, as [+ *pro*-drop] languages, and as [- *pro*-drop] languages; i.e., DS speakers accept both constructions in examples 2.36.a. and b.:

---

[104] The trace in English *that*-trace structures is not properly governed, according to Chomsky (1986), because the Minimality Condition requires that an element be governed by the closest potential governor – *here,* that – *and* that *is inert for government, so this blocks the higher trace in the Spec, CP, from governing its antecedent. According to Rizzi (1990), the trace in the Spec, CP, does antecedent govern the lower trace, but* that *is inert as a governor. In contrast, a null complementizer can be expanded as AGR (when the Spec, CP, is occupied by a wh-operator or trace and the embedded clause is tensed), which can act as a proper head governor.* (Gathercole and Montes, 1997: 76-77)

(2.36.)

a. *¿Quién dijiste* [$_{CP}$ t' [$_{C'}$ *que* [$_{IP}$ t *escribió* *El Quijote*?]]]
Who said that wrote The Quixote ?
'Who did you say wrote The Quixote?'

b. *¿Quién dije* [$_{CP}$ t' [$_{C'}$ e [$_{IP}$ t *trabajó en el turno de noche?*]]]
Who said worked in the shift of night?
'Who did I say worked in the night shift?'

As we observed in the other properties of the *pro*-drop parameter previously described, DS shows different alternatives for the *that*-trace effect: one that patterns with GS and another one that patterns with English. DS behaves in some cases as GS (in that it has an overt Comp- '*que*'-) and as non-null subject languages, such as English (in that in some cases it does not allow overt Comp, but an empty one).

Toribio (1993) proposes that the '*que*' ('that') in the example (2.36.a.) is a proper governor and, therefore, it is not inert for government. Toribio (1993: 183-184) explains this position as follows (2.37.).

(2.37.)

> '[t]he relation which effects this change is the Specifier-head agreement which obtains when the SpecC is filled with a wh-operator or its trace. That is, *que* in DS D2 may be an A-bar agreeing complementizer, equivalent to the null complementizer *Ø-agr* in English [...]. Although it is an invariant form, *que* shares abstract agreement features with the operator which moves through SpecC, and may therefore license the subject trace in SpecI.'

In this account DS would be a language that has two options: one in which a null complementizer is needed because *that* is inert for government, and one in which *that* is an agreeing complementizer that allows the licensing of subject trace.

In summary, this property of the null subject parameter consists on violating the *that*-trace filter. In [+ *pro*-drop] languages it is obligatory to have an overt

complementizer; whereas in [- *pro*-drop] languages, no overt complementizer is allowed; i.e., no trace can be left after the movement of a wh-operator. In that way, the C head is not projected and the antecedent (which is in [Spec, CP]) can properly govern the subject trace. In DS, the two possibilities are available.

In this chapter, I have presented an overview of the literature on the four properties normally ascribed to the null subject parameter; i.e., phonologically null subjects, subject-verb inversion, expletives, and *that*-trace filter for English, DS, and GS. In the next chapter, I will present the methodology used in this dissertation to gather the linguistic corpus analyzed. I describe the biolinguistic information of participants in the study, as well as the geographical setting where the data were gathered. In the end, the materials used to elicit the linguistic data are presented.

Chapter 3. Methodology

3.1. Introduction

The main focus of this study is analyzing how four of the properties normally associated with the *pro*-drop parameter (null subjects, verb-subject inversion, expletives, and *that*-trace constructions) are represented in the minds of DS speakers. As a reminder, DS is a Spanish variety that 'is in the process of restructuring' (Toribio, 2000a: 336) its parametric representation; i.e., it is undergoing an internal change from a [+ *pro*-drop] language to a [- *pro*-drop] one. In this chapter, I present the three groups of speakers that participated in the study, as well as the different data collection methods used.

This study examined three DS populations: two monolingual DS groups residing in the Dominican Republic (one from El Cibao[105] and one from Santo Domingo[106]), and one group of DS-English bilingual students living in New Brunswick (N.J. -a northeastern state in the United States-) –BSNB, henceforth. Since in the Dominican Republic, the speakers from El Cibao have been said to show more evidence of an ongoing change in the parametric representation of the *pro*-drop properties,[107] studying this variety will provide evidence of the language change process. Their results are compared with the ones produced by those of Santo Domingo speakers to observe if the apparent parametric shift has also spread to the capital. In order to probe if the education level can function as a moderating factor for the change (due to prescriptivist norms), the level of education achieved by the Santo Domingo participants is also taken into consideration.

---

[105] El Cibao is a northwestern area of the Dominican Republic.
[106] Santo Domingo is the capital city of the Dominican Republic, and it is located on the south of the island.
[107] See chapters 1 and 2 for detailed information.

In this study, I expect to find the effect(s) that language contact may have in the representation of four of the *pro*-drop properties among DS bilingual speakers. This effect is observed by comparing two monolingual groups of DS speakers (in a non-contact situation; i.e., living in the island) with a bilingual group of DS participants. Note that the monolingual DS variety has been said to be in-between two linguistic systems (one system similar to GS and the other similar to English), and the bilingual group is in contact with English, GS, and other CS varieties. Therefore, studying the Dominican variety in a context where DS speakers are in contact with null and non-null subject languages (other GS varieties and English, respectively) will provide a better picture of how the properties of the DS variety are affected by contact.

The hypotheses presented in this dissertation[108] are examined through the data obtained from three groups of DS participants in different tests: a questionnaire related to the participants' social and biolinguistic information, three sets of grammaticality judgment (GJ) tasks, and three different oral tasks. These tests provided biolinguistic and linguistic data, respectively. The GJs and the oral tasks study the linguistic phenomenon under investigation (four properties of the *pro*-drop parameter), whereas the biolinguistic questionnaire gather biographical and social information of the participants.

The two methods used to collect the linguistic data (GJs and oral reports) provide a broad picture of how the four *pro*-drop properties are represented in the DS speakers' minds. These two types of data collection instruments aim to probe the participants' competence and their performance.[109] Specifically, the GJ tasks elicited data about the

---

[108] See hypotheses in chapter 1.

[109] Although the DS variety has been broadly studied, to the best of my knowledge, I am not aware of any study that focuses on the participants' performance (through oral data) and their competence (through GJs),

participants' competence in the four *pro*-drop properties (null subjects, verb-subject inversion, expletives and *that*-trace constructions),[110] and the oral corpus provided information on the participants' performance in two of the *pro*-drop properties (null subjects and verb-subject inversion).

The biolinguistic questionnaire provides information on social factors that may function as variables affecting the linguistic data.[111] For each DS group a different social factor is taken into consideration. Since the El Cibao area has been considered to lead the linguistic parametric change inside the Dominican Republic (Toribio, 2000a), the age of the participants may reflect this linguistic shift (see section 3.2.). Consequently, I would expect to find more properties of non-null-subject languages among the younger monolingual participants than among the older ones. However, this could turn out differently, since the younger participants from El Cibao would likely have a higher level of education than their parents. And if the older participants from El Cibao are isolated, their language could also change more rapidly (oral language, and no normative pressures). For the Santo Domingo group, I consider the participants' level of education. I relate the level of education of the participants to the linguistic representation of the four *pro*-drop properties, in order to find out whether formal academic instruction affects the realization of these properties. For the DS-English bilingual group of speakers, I consider how their 'patterns of language use' can affect the four *pro*-drop properties under study.[112] In this study, I use the term 'patterns of language use' to include three factors:

---

and considers the effect that social factors (such as the participants' age and language contact with other languages) may have over the linguistic representation of the null subject parameter.

[110] See section 3.5. below for a detailed explanation of the different properties examined in each task.

[111] External factors can influence internal ones (Schmidt, 1985; Mufwene and Gilman, 1987; Maandi, 1989; Silva Corvalán, 1994).

[112] The bilingual DS speakers have similar educational levels and they are in the same age range.

language spoken at home, language they feel more comfortable speaking, and language contact with English and other Spanish varieties (Caribbean and GS). If language contact influences ongoing linguistic changes, then one would expect that placing DS speakers in contact with a prototypical non-null subject language (i.e., English) may accelerate the restructuring process favoring the [– *pro*-drop] values of the properties. However, even in such a situation, frequent contact with a null subject language, such as GS, may slow down the ongoing restructuration process. This dissertation analyzes how the four *pro*-drop properties are affected by language change and by contact with prototypical null, non-null subject languages, and with other CS varieties.[113] Specifically, this study investigates which properties of the null subject parameter more easily converge with null or non-null subject languages.

This chapter is outlined as follows: In section 3.2., I present the demographics of the study, emphasizing some social factors for each one of the groups in the study. In section 3.3., I introduce the different contacts used to enlist participants in the Dominican Republic and in N.J. In section 3.4., I explain how the data were obtained and where, making reference to the geographical areas. And finally, in section 3.5., I review the materials used to collect the data for the study (biolinguistic questionnaire, GJ, and oral tasks).

3.2. Demographics

The participants of this study are sixty: a group of forty monolingual DS speakers living in two areas of the Dominican Republic (El Cibao and Santo Domingo), and a

[113] The CS varieties show some differences from GS in the representation of the four *pro*-drop properties under study. Refer to chapters 1 and 2 for further details.

group of twenty BSNB. I present below a description of the monolingual and bilingual DS participants of the study.

3.2.1. Monolingual group: residents of the Dominican Republic

The group of forty monolingual DS speakers is formed by twenty speakers from El Cibao (an area in the Northwestern part of the island), and the other twenty are from Santo Domingo, the capital city of the country.[114] Refer to section 3.3. in this chapter for further information about these geographical areas. A summary of some biolinguistic and social data are presented below.

3.2.1.1. Age and gender of monolingual participants: residents of the Dominican Republic

The ages of the forty monolingual participants living in the island ranges from 18 to 73 years old, with an average age of 34.9. Specifically, the average age of El Cibao speakers who participated in this study is 43.3 (with a maximum of 73, and a minimum of 20 years old), and the average age of the Santo Domingo participants is 26.4, with a maximum age of 55, and a minimum of 18 years old. The age variable will be examined only in the El Cibao group, since the speakers from this area have been considered to be in the forefront of the linguistic change (from a null subject language to a non-null subject one). Moreover, El Cibao speakers have been identified as exhibiting, in their speech, most of the properties that suggest that DS is undergoing an internal linguistic change (Henríquez Ureña, 1940; Jiménez Sabater, 1984; Toribio, 2000a). A tendency to the loss of some of the *pro*-drop properties may be observed among the El Cibao

[114] The Santo Domingo participants belong to the area of 'Santo Domingo de Guzmán.'

participants of different age ranges. Consequently, age in the group from El Cibao may show a correlation with the parametric shift (if not mitigated by education). A summary of the distribution by age among the monolingual speakers from El Cibao is provided in table 3.1. In parenthesis is the percentage that they represent. [115]

Table 3.1. Distribution of participants according to age in El Cibao

	El Cibao
20-29	4 (20%)
30-39	6 (30%)
40-49	3 (15%)
50-60	3 (15%)
Over 60	4 (20%)
TOTAL	**20 (100%)**

The older group of participants from El Cibao is expected to exhibit properties closer to the [+ *pro*-drop] group of languages than the younger participants.

Of the forty monolingual participants, twenty-three are male and seventeen are female speakers. In the El Cibao group, eight participants (40%) are male and twelve (60%) female. In the Santo Domingo group, fifteen (75%) participants are male and five (25%) are female.

3.2.1.2. Educational level of monolingual participants: residents of the Dominican Republic

The educational level variable was only considered among the Santo Domingo participants, since they exhibit a wide range of educational levels. Hence, this factor can have a bearing on slowing down the process of linguistic change.[116] The El Cibao group

[115] All the participants in this study were 18 years old or older.
[116] Since El Cibao DS variety has been noted to show robust evidence of a linguistic change, in the El Cibao area, I looked for a population that would not be very influenced by the 'normative' or 'prescriptive' use of language.

has a total of three participants (15%) with college-level studies, four (20%) had secondary-level studies, four (20%) had finished elementary school, seven had not finished elementary school and two (10%) had no schooling. The level of education achieved by the monolingual speakers from Santo Domingo can be observed in table 3.2.

Table 3.2. Distribution of Santo Domingo participants according to level of education

	Santo Domingo
Elementary school not finished	2 (10%)
Elementary school finished	3 (15%)
Vocational school	1 (5%)
Secondary school	5 (25%)
Still at university	7 (35%)
University finished	2 (10%)
Total	**20 (100%)**

Table 3.2. presents the distribution of the monolingual participants in Santo Domingo according to their educational level. Five participants had reached elementary-level (25%), six of them had reached secondary and vocational school (30%), and nine had college level studies (45%). The different categories considered under the educational level factor are:

- ‘No school’: This category was used to classify those participants who did not attend school.
- ‘Elementary school not finished’: The participants under this category attended some levels of elementary school but they did not complete schooling.
- ‘Elementary school finished’: This category represents those people who finished elementary school; i.e., they ended eighth grade.
- ‘Vocational school’: There was only one participant who attended the vocational school. She studied to become a secretary.

- ‘Secondary school’: Participants who finished twelfth grade were included in this category.
- ‘Still at university’: This category is used for those students who were in their process of obtaining a Bachelor’s degree.
- ‘University finished’: This category describes those participants who finished their undergraduate work; i.e., they obtained a Bachelor’s degree.

3.2.2. Bilingual group: Students residing in New Brunswick (N.J.)

Defining a person’s bilingualism is a difficult task, since the knowledge of both languages can range from having a ‘native-like control’ of the languages (Bloomfield, 1933: 56), to being able to produce meaningful sentences in one of the languages (Haugen, 1953), or to just having one of the language skills[117] in the second language (MacNamara, 1966).

The twenty DS bilingual speakers in this study can be defined as a group of DS-English bilingual students who had exposure to DS from birth, and whose parents were born and raised in the Dominican Republic. They were the first generation in the U.S. (some of them were born in the Dominican Republic, and others were born in the U.S. or arrived to the U.S. before puberty). They all attended or were attending schools in New Brunswick (central N.J.) at the time of the study, and had formal education in English. All the DS-English bilingual participants in my study could speak and be understood by any Spanish-native speaker. This group of bilingual DS participants is formed by students who were living in New Brunswick (N.J.) at the time of the study. The group characteristics are:

[117] Listening, Speaking, Reading, or Writing.

- Their ages range from 18 to 25 (average 20.5).
- They were all living in New Brunswick (N.J.) at the time of the study.
- All of them had studied or were studying in New Brunswick. Eighteen students were at the time of the interview pursuing their undergraduate education in a local university in central N.J. One of them had just finished her Bachelor's degree, and another one was about to start his university education.
- All bilinguals had parents that were born and raised in the DR. This fact assures that the participants in this group were exposed to the DS variety from birth.

The distribution of the participants according to these variables can be observed in table 3.3.:

Table 3.3. Distribution of bilingual students according to place of birth

Place of Birth	**U.S.**	**El Cibao**	**Santo Domingo**
	8 (40%)	4 (20%)	8 (40%)

Observing the table 3.3., one can notice that there is the same number of participants who were born in the U.S. and in Santo Domingo (8 participants in each area; i.e., 40%), and four participants (20%) were born in El Cibao. The different place of birth of the bilingual participants was not considered as part of the factors analyzed in this study.

Three social factors provide evidence of the bilingual participants' patterns of language use: contact with other Spanish varieties and English, language spoken at home, and the language comfort level. When we consider language contact with other linguistic varieties, the language spoken at home, as well as the language they prefer using (language in which they feel more comfortable), we can find evidence for how contact with Spanish varieties and English can influence the DS linguistic representations of four of the *pro*-drop properties in bilinguals. Since one of the main goals of this dissertation is

to observe the effect that contact with a language (or with a linguistic variety) may have over the representation of four *pro*-drop properties, I decided to maintain constant the age and educational level of the DS-English bilingual participants. However, the gender of the bilingual participants varies: most of the participants are female (85%; i.e., 17 participants), whereas there are only three male bilingual speakers (15%).

According to the U.S. census of 2000, 48,573 inhabitants lived in New Brunswick, out of which 39% were Hispanic or Latino.[118] The Dominican population represents nearly 5.9%[119] of the total population living in New Brunswick in 2000, and around 15% of the Hispanic and Latino population. The bilingual students participating in my study attend schools in New Brunswick (N.J.) and reside in the area for extended periods of time.

3.2.2.1. Age of arrival to the U.S. of BSNB

As mentioned in section 3.2.2., not all the bilingual participants were born in the U.S. (see table 3.3. above). Table 3.4. shows the distribution of the bilingual speakers according to the age of arrival to the U.S. However, this variable does not form part of the analyses in this study.

Table 3.4. Distribution of bilingual participants (age of arrival to the U.S.)

Age of arrival U.S.	**Born in U.S.**	**Before age 4**	**Ages 5-12 yrs**	**Ages 13-19**
	8 (40%)	3 (15%)	4 (20%)	5 (25%)

As table 3.4. shows, eight of the bilingual participants (40%) were born in the U.S., and the rest of them (60%) were born abroad and arrived in the US before puberty.

[118] 18, 947 Hispanic or Latino (of any race) inhabitants in New Brunswick in 2000.
[119] 2,855 Dominican people living in New Brunswick in 2000.

3.2.2.2. Contact with other varieties (BSNB)

Since the DS variety in a non-linguistic contact situation shows properties of both null and non-null subject languages, studying this variety in a linguistic contact situation with null and non-null subject languages will provide evidence of the effect that language contact has over the representation of some *pro*-drop properties. All the bilingual DS-English participants in this study self-reported that they had constant contact with English. All of them had received education in English, and many of them were taking university courses in English at the time of the interview. I also collected information about their everyday contact with Spanish varieties. All the bilingual speakers in this study self-reported that they had contact with English and with CS varieties (mainly Dominican, but also Puerto Rican and Cuban). Moreover, some of the participants also reported that they also had contact with GS varieties, such as Colombian, Peruvian, and Mexican. Table 3.5. presents a summary of the language contact that the bilingual participants self-reported.

Table 3.5. Distribution of contact with Spanish varieties, as self-reported by the BSNB participants

Frequent contact with GS	**Infrequent contact with GS**
Number of participants: 11 (55%)	Number of participants: 9 (45%)

As illustrated in table 3.5. above, eleven participants (55%) self-reported having frequent contact with GS (apart from contact with CS), whereas nine participants (45%) reported having infrequent contact with GS. These nine participants self-reported having contact mainly with CS varieties (DS, Cuban, and Puerto Rican).

3.2.2.3. Language at home (BSNB)

As Clyne (2003: 22) suggests 'the advantage of the home language question, however, is that it is a good predictor of future use and maintenance. If a language is not transmitted in the home, it is not likely to survive another generation.' Therefore, the language spoken at home is one of the factors studied in this dissertation. A summary of the bilingual DS participants' language use at home can be found in table 3.6. below.

Table 3.6. Distribution of languages spoken at home by DS bilingual participants

Spanish	Spanish and English
Number of participants: 9 (45%)	Number of participants: 11 (55%)

As observed in table 3.6., out of the twenty bilingual participants, 55% of them (i.e., eleven participants) use Spanish and English at home; and nine of them (45%) speak only in Spanish at home. The language spoken at home is one of the social factors involved in the notion 'patterns of language use.' These factors provide evidence of the linguistic input received by the bilingual speakers and could be indicators of the influence that other languages may have over the *pro*-drop properties.

3.2.2.4. Language comfort level (BSNB)

The bilinguals also self-reported the language that they felt more comfortable using in oral production, as observed in Table 3.7.

Table 3.7. The language comfort level reported by BSNB

Spanish	English	Spanish and English
Number of participants: 3 (15%)	Number of participants: 5 (25%)	Number of participants: 12 (60%)

Table 3.7. shows that twelve out of the twenty participants (60%) prefer speaking in both Spanish and English, five participants (i.e., 25% of them) feel more comfortable speaking English, and only three participants (15%) reported that they were more comfortable using Spanish rather than English.

3.3. Contacts for data collection

The data were collected in different geographical areas, according to the groups interviewed: in two areas of the Dominican Republic, and in one area in New Brunswick (N.J.). In the Dominican Republic, the data were collected in El Cibao (specifically in Gaspar Hernández) and in Santo Domingo (the capital city of the Dominican Republic); and in the U.S., the data were collected in New Brunswick, N.J. In the Dominican Republic, most of the participants were recruited by two local Dominican participants (one in each area), while others were recruited directly by the researcher. In the U.S., all the participants were recruited directly by the researcher.

3.3.1. Contacts in the Dominican Republic (El Cibao and Santo Domingo)

Most of the recruitment in the Dominican Republic was done through local people, who served as liaisons between the researcher and the two Dominican communities interviewed. It should be noted that, although the researcher is a native Spanish speaker, she does not reside in the DS speech community and does not speak the

same Spanish variety. Furthermore, the recruitment process in the Dominican Republic was not random.[120]

In El Cibao area, the local recruiter gathered participants of the same speech area (most of the participants were his acquaintances), and he offered his house as a location for the study. Since the participants were familiar with this location, they felt comfortable during the collection of the data. In Santo Domingo, the recruitment process followed the same procedure as in El Cibao area. Therefore, some local DS speakers recruited some acquaintances, neighbors, and friends; i.e., members of the same speech community.

3.3.2. Contacts in New Brunswick (N.J., U.S.)

The participants of the bilingual group were living in New Brunswick (N.J., U.S.) at the time of the study. Although most of the bilingual participants were students at the university (90%), I also interviewed a secretary at the university (5%) who had just finished her university studies, and a student (5%) who was about to start his university education.

In order to reach and gather the group of DS bilingual participants, the researcher was assisted by many colleagues at the university.[121] The researcher also interviewed people recruited through SED (*Sociedad Estudiantil Dominicana*).[122] This contact served as a connection to the researcher and the Dominican community of students. Although

---

[120] In El Cibao, the participants covered different age ranges, in order to observe if the age factor can provide evidence of the apparent diachronical parametric change. In Santo Domingo, although different age ranges were covered, most of the participants were under 30 years old and they had different educational levels. The aim of the Santo Domingo selection of participants is to observe if the educational level of the participant may have an influence in the representation of the *pro*-drop parameter.

[121] Special thanks for their help in recruiting to the my graduate fellows (in alphabetical order): Marta Cabrera-Serrano, Patricia Granja-Falconi, and Molly Palmer, among others; and professors (in alphabetical order): Professor José Camacho, Professor Nydia Flores, Professor Liliana Sánchez, Professor Adolfo Snaidas, and Professor Thomas Stephens.

[122] SED is a society that welcomes Dominican heritage students at college.

the selection of DS bilingual speakers was random, after contacting them, the researcher selected only those students who fit the design of the study; i.e., DS-English bilinguals, whose parents were born and raised in the Dominican Republic, who studied or were studying in New Brunswick at the time of the interview, and who were between 18 and 25.

3.4. Data collection setting

In this section, I present the setting where the data of the three groups of participants were gathered. The data in this study were collected in three different geographical areas. The monolingual data were collected in two areas of the Dominican Republic, in a town in the North of the island (Gaspar Hernández), which belongs to El Cibao area; and in the South of the island, in Santo Domingo. The bilingual data were collected in New Brunswick (N.J., U.S.). Before collecting the data, I informed the participants about the study and, after they agreed to participate in it, I started collecting the biolinguistic and social data, and finally the linguistic data (GJs and oral production tasks).[123]

The biolinguistic and social data were obtained by an oral interview between the researcher (myself) and the participant. I marked the information provided by the participant in a multiple-choice questionnaire. This information was later coded in SPSS,[124] and used in the analysis of the linguistic variables. The linguistic tasks consist of

---

[123] IRB Protocol # E05-426, title '*Pro*-drop parameter in the Dominican Dialect (Bilinguals and Monolinguals).' Approved on 05/12/2005.

[124] 'SPSS 12.0 is a comprehensive system for analyzing data. SPSS can take data from almost any type of file and use them to generate tabulated reports, charts and plots of distributions and trends, descriptive statistics, and complex statistical analyses.' (SPSS Inc, 2003: iii)

three written GJs,[125] and three oral production tasks. The participants did the GJ tasks first and the oral production tasks after that. Each participant spent approximately between 45 minutes to an hour to complete the study: around half an hour in the GJ tasks (approximately ten minutes each), and around half an hour in the oral tasks. A detailed description of the GJs and oral tasks is provided in section 3.5.

The three groups of DS participants were administered the same linguistic tasks. They all were paid $10.00 U.S. for their participation. The trip and stay in the Dominican Republic, as well as payment to the participants was financed by two grants from the Department of Spanish and Portuguese, at Rutgers, the State University of N.J. (U.S.).

3.4.1. Data collection setting: Monolinguals (Dominican Republic)

The Dominican Republic is located on the Caribbean Sea, below the Tropic of Cancer in the Northern Hemisphere. It occupies two thirds of the island of "La Hispaniola" which it shares with its only boundary country, Haiti. The capital city is Santo Domingo, which is located in the Southern part of the island. Other main cities are Santiago, located on the North of the island,[126] and San Pedro de Macoris on the East of the country. The total population of the country is 8,562,541 habitants as per the 2002 census.[127] The country is divided into 31 provinces. One of them is Puerto Plata, where the town of Gaspar Hernández is located. This province (Puerto Plata) is in El Cibao region.

---

[125] In El Cibao area, there were some illiterate participants. In this case, I read the GJ tasks out loud and they told me the appropriate answer.
[126] The Northern part of the Dominican Repiblic is also known as El Cibao.
[127] See 'Censo de población y vivienda 2002' in http://www.one.gob.do/index.php?option=com_docman&task=cat_view&gid=80&Itemid=230

The population of Gaspar Hernández is 19, 228 out of which 9,873 are males and 9,355 are females. The literacy rate of the population is 65%. The distribution of the population according to the maximum level of studies achieved[128] is as follows: 70% elementary school, 23% secondary school, 7% undergraduate, 0.14% masters, and 0.03% doctorate.[129] A representative group of participants from El Cibao area was included in the study, based on the demographic information provided by the census. That is, 65% of the participants had reached a maximum of elementary education,[130] 20% reached a maximum of secondary school, and 10% were undergraduate students at the time of the interview.[131]

Santo Domingo is part of the National District Region.[132] The National District population is 913,540 people, out of which 430,698 are males, and 482,842 are females. In this area of the Dominican Republic, the percentage of inhabitants that knows how to read and write is somewhat over 80%.[133] According to the maximum level of education of the population, 36% elementary school, 27% secondary school, 29% undergraduate, 5% specialty and masters, 0.8% doctorate, and other 2.2% (no school and N/A). In this study, as is illustrated in table 3.2., all the participants from Santo Domingo had some schooling. Out of the 20 Santo Domingo participants in the study, 10% started but did not finished elementary school, and 15% of the participants reached a maximum of elementary school education. Secondary school was the maximum level of education for

---

[128] Out of the total percentage of population over 3 years old who attended school.
[129] Refer to section 3.2.1.2. for the distribution of the El Cibao participants according to their level of education.
[130] 10% had no school, 35% did not finish elementary school, and 20% finished elementary school.
[131] The distribution of the working population according to the economic activity in Gaspar Hernández is as follows: 23% non-skilled workers, 22% services, 15% agriculture, 11% hand crafting related , 9% machinery, 6% secretaries and office related, 5% professionals, 4% government, 1% army, 4% other activities.
[132] Santo Domingo is also called Municipio Santo Domingo de Guzmán.
[133] 738,213 inhabitants.

25% of the participants, and another 5% studied in a vocational school. With respect to university education, 35% of the Santo Domingo participants were studying their bachelor's degree at the moment of the interview, and 10% of the participants had already finished their B.A. An adequate representation of this geographic area was incorporated in this study.

All the El Cibao participants belong to the same area. Among the El Cibao participants, sixteen (80%) out of the twenty participants were interviewed in the home of one of the participants,[134] located in the town Gaspar Hernández. As previously mentioned, in Santo Domingo the participants were part of a speech community (members of the same family, neighbors or acquaintances), and they were all interviewed in the home of one of them. In both cases, in El Cibao area and in Santo Domingo, more than one participant was present at the moment of the study, although each participant completed the tasks individually.

3.4.2. Data collection setting: BSNB

In the U.S., the bilingual interviews and tasks were collected in a university office. Although during the administration of the GJ tasks, other DS participants could be present in the setting, each participant completed his/her GJ tasks independently. The oral tasks were administered individually, in an isolated room (in a professor's office). [135] The participant and the researcher were the only people in the room.

---

[134] As mentioned before, one local DS person acted a recruiter with the purpose of gathering participants for the study. This 'recruiter' in El Cibao offered his home as location for the interviews. This fact made the participants feel comfortable when producing natural speech (GJs and oral tasks), since they were held in the recruiter's house, and among acquaintances.

[135] Special thanks to Professor Nydia Flores, who offered me her office to work on my data collection and data analysis.

3.5. Materials

The corpus analyzed in this study was obtained from sixty participants, through oral and written tasks (GJs). The oral corpus was recorded using Olympus digital voice recorders (VN-240PC and VN-480PC). The recordings were later downloaded and transcribed in Microsoft Word files. The codification of the data was conducted using an SPSS input file. A total of twenty hours of oral production tasks and speech were recorded, coded, and transcribed.

The total number of tokens analyzed in both GJ and oral tasks is 11,184.[136] These tokens were finite transitive verbs that appear in main sentences.[137] Verbs were the elements selected for the linguistic analysis, since subjects (overt or null) are obligatory arguments of verbs.

In May 2005, I obtained permission from the Office of Research and Sponsored Programs to start interviewing participants. The monolingual corpus was gathered during December 2005 and January 2006, whereas the bilingual corpus was gathered along 2006.

3.5.1. Biolinguistic and social data collection

The biolinguistic and social data provided information relevant for the study of the linguistic variables, such as the participants' age, and their everyday use of Spanish and English (in the case of the DS-English bilingual speakers). These data were obtained orally in a non-recorded interview between the researcher and the participant. The

[136] Refer to table A.3.1. in appendix 3 for a detailed number of verbs per group, and task.
[137] According to some scholars (Du Bois, 1987; Allen, 2000) intransitive verbs tend to have a higher percentage of overt subjects than transitive ones.

answers provided by the participants were annotated in a multiple choice questionnaire by the researcher.

3.5.2. Linguistic data collection

I used different data collection instruments to obtain the linguistic corpus for the study. The linguistic data were obtained using written tasks (GJs) and oral tasks (oral reports). The GJ tasks provided data on the participants' linguistic competence, and the three oral tasks elicited data on their linguistic performance. I present below a description of each one of the linguistic tasks used in this study.

3.5.2.1. Grammaticality Judgments (A-test, B-test, and C-test)

The study included three GJ tests. In general, the GJs followed the description of the Multiple-Choice Questionnaires (MCQs) presented by Márquez Reiter and Placencia (2005: 227): 'Multiple-Choice Questionnaires (MCQs) comprise a description of the scenario followed by a choice of responses, from which the respondent has to select one.' Two of them tested the distribution of subjects in interrogative sentences and *that*-trace effects, and the other one tested the distribution of subjects in declaratives.[138] The three GJ tasks (A-test, B-test, and C-test) had a similar outline: the presentation of a scenario and some possible answers to choose from. Some of the items were accompanied by a drawing related to the scenario presented. The main difference between Márquez Reiter and Placencia's (2005) MCQs and the GJs used in this study is that participants in this study were allowed to select as many answers as they believed were appropriate for each

[138] See tables A.3.2. and A.3.3. in appendix 3 for a clear distribution of each task.

situation.[139] The idea guiding the use of more than one possible answer in the GJs was to have information about all the possible linguistic selections that the participants had for each property. Since, as was previously mentioned, DS has been documented as a language undergoing change, some of its speakers might have dual specifications for some of the *pro*-drop properties under study.

The format of the three GJs is very similar. In the three GJ tests, there are over 30 items (A-test: 31 items; B-test: 35 items; and C-test: 34 items). In the A-test, the participants were asked to select between a preverbal and a postverbal subject in an interrogative sentence (or choosing both options; i.e. preverbal and postverbal subjects), and there were also some items probing *that*-trace effects. In the B-test, participants chose among a null, a preverbal, and a postverbal subject (for referential subjects and expletives) in interrogative sentences, and some items probed *that*-trace effects. In the C-test, participants could select between null, preverbal, and postverbal subjects in declarative sentences, and it included items with null and overt expletives. All these items begin with the description of a scenario in a few lines, followed by a series of possible answers to choose from and, in some cases a picture accompanies each item in the questionnaire.[140] Another common feature among the three GJ tests is that the possible

---

[139] Although the participants were asked to select as many answers as they thought were appropriate for each scenario, most of the monolingual participants selected only one answer. On the other hand, the bilingual participants showed a higher tendency to select more than one possible answer than the monolingual speakers. In summary, among the bilingual students, nine of them answered more than one answer in some of the items in A-test, eleven students anwered more than one answer in some items of B-test, and seven answered more than one answer in the C-test. On the other hand, in the El Cibao group, only one participant answered more than one answer in the A-test, in the B-test, and in the C-test. In the Santo Domingo group, none of the participants selected more than one answer in the A-test and C-test, and two participants chose more than one answer in some items of the B-test.

[140] The drawings were added to some of the secenarios to make the questionnaires more attractive to the participants, and to help them with any vocabulary that might be misleading for some of the participants. Note that the same questionnaires were distributed to monolingual and bilingual participants, who live in different sociocultural environments, and who may under-use or may have forgotten some lexical items. Therefore, providing a visual cue would help the participants to remember the meaning of some words.

answers in the three GJ tasks had transitive verbs in the preterit with an overt direct object (either as a full lexical DP or as a clitic). In each one of the GJ tasks, person and number features are balanced. The tests contain items with all persons and number subjects (such as, '*yo*' –'I'-, '*tú*'-'you' sg informal-; and '*usted*' -'you' sg formal-). The type of interrogative sentence was also carefully balanced in the two GJ tests for interrogative sentences. The different types of interrogative sentences (yes/no, wh-argument, and wh-adjunct) were balanced according to the person and number of the subject. Samples of each type of interrogative sentence are provided in examples 3.1. – 3.3.:

(3.1.) Yes/No questions:

a. *¿Dejaste tú una nota en mi casa ayer o fue tu novia María?*
Left you a note in my house yesterday or was your girlfriend María?
'Did you leave a note in my house yesterday or was it your girlfriend María?'

b. *¿Tú dejaste una nota en mi casa ayer o fue tu novia María?*
You left a note in my house yesterday or was your girlfriend María?
'Did you leave a note in my house yesterday or was it your girlfriend María?'

(3.2.) Wh-arg (Wh-word functions as an argument)

a. *¿Qué tú creíste?*
What you believed?
'What did you believe?'

b. *¿Qué creíste tú?*
What believed you?
'What did you believe?'

(3.3.) Wh-adj (Wh-word functions as an adjunct)

a. *¿Cuándo tú llevaste tu carro a que lo lavaran por última vez?*
When you took your car to that it washed last time?
'When was the last time that you took your car to be washed?'

b. *¿Cuándo llevaste tú tu carro a que lo lavaran por última vez?*
When took you your car to that it washed last time?
'When was the last time that you took your car to be washed?'

The main difference among the three GJ tasks was the number of possible answers to choose from, and the types of sentences (declaratives or interrogatives) being tested in each case. Table 3.8. summarizes what each GJ task tested, the number of total answers, and the *pro*-drop properties being tested.

Table 3.8. Summary of properties of the three GJ tasks used

	Sentence type tested	**Subject choices**	**Properties being tested**
A-test	Interrogatives	**Two**[141]: preverbal, postverbal	1) SV – VS 2) That-trace
B-test	Interrogatives	**Three**[29]: null, preverbal, and postverbal	1) Null 2) SV – VS 3) That-trace 4) Expletive- *ello*
C-test	Declaratives	**Three**: null, preverbal, and postverbal	1) Null 2) SV – VS 3) Expletive- *ello*

The two GJ tests with interrogative sentences (A-test and B-test) differ in the number of possible answers. While the A-test has only two possible answers[142] (preverbal and postverbal subjects) the B-test had three possible answers[143] (preverbal, postverbal, and null subjects). The types of interrogative sentences (wh-argument, wh-adjunct, and yes/no questions) as well as the person and number features were balanced across items. In the case of the GJ test with declaratives, each item had three possible answers (preverbal, postverbal, and null subjects). By balancing the variables, a comparison could be made regarding the participants' preference in their selection of the subject types

[141] In items testing *that*-trace constructions, one more answer ('None') was added.
[142] Except in the questions testing *that*-trace constructions, where an extra 'None' answer is added.
[143] Except in the questions testing *that*-trace constructions, where an extra 'None' answer is added.

(overt pronominal/lexical DPs, or null subjects) and their position (preverbal or postverbal) in the constructions being tested (interrogatives and declaratives).

3.5.2.1.1. A-test: Interrogative sentences (two options: preverbal or postverbal)

In the A-test, there are only two possible answers for each scenario: one with a preverbal subject and one with a postverbal subject.[144] As previously explained, the participants were asked to select as many answers as they thought were appropriate for each scenario. The A-test includes thirty-one scenarios testing interrogative sentences with preverbal and postverbal subjects (but no null subjects were included), out of which there were four items testing *that*-trace constructions. In this GJ task (A-test) the expletive *ello* is not considered.[145] Twenty-seven of the A-test items include the following types of interrogative sentences: eight scenarios with yes/no questions, eight scenarios with a wh-word functioning as an adjunct, and nine scenarios with a wh-word functioning as an argument. Each type of interrogative sentence (i.e., yes/no, wh-adjunct, and wh-argument) was used with all subject pronouns and with lexical DPs. By having this balanced distribution of interrogative sentences and subject type, I was able to examine if the preverbal or postverbal use of subjects is related to the type of interrogative sentence[146] or to the person and number of the subject in use. Figure 3.1. exemplifies three scenarios in which the subject person and number studied is the second

[144] In the B-test there are three possible answers: preverbal, postverbal, and null subjects.
[145] Since the A-test only had two possible answers (preverbal and postverbal subjects), and the expletive *ello* is not accepted by all speakers, including the overt expression of the expletive *ello* in the A-test would have caused problems for many participants.
[146] Note that the position of subjects with yes/no interrogative sentences is not part of this study. However, I examine wh-adjunct and wh-argumental interrogative sentences.

person singular informal pronoun '*tú*' ('you' sg informal) in the three different types of interrogative sentences (wh-argument, yes/no, and wh-adjunct, respectively).

3) Ayer mi amigo Jaime nos contó a mi novia y a mí todos los países que había visitado en vacaciones. Jaime es bastante mentiroso. Así que después de hablar con él, le pregunté a mi novia:

1. ¿Qué tú creíste?
2. ¿Qué creíste tú?

10) Ayer me encontré una nota en la puerta de mi casa. Pienso que fue Miguel. Hoy veo a Miguel en la universidad y le pregunto:

1. ¿Dejaste tú una nota en mi casa ayer o fue tu novia María?
2. ¿Tú dejaste una nota en mi casa ayer o fue tu novia María?

24) Mi carro está muy sucio, y mi mamá me dijo:

1. ¿Cuándo tú llevaste tu carro a que lo lavaran por última vez?
2. ¿Cuándo llevaste tú tu carro a que lo lavaran por última vez?

Figure 3.1. Example items of '*tú*' ('you' sg informal) form in the first GJ task (A-test)[147]

Figure 3.1. shows some items of the A-test, where there is a scenario and two possible answers (preverbal or postverbal subjects). For instance, in items 3, 10 and 24 above (figure 3.1.), I tested the use of the second person singular pronoun '*tú*' ('you' sg

[147] My translation:
3) Yesterday, my friend Jaime told my girlfriend and me about all the countries that he had visitied. Jaime usually lies. So, after talking to him, I asked my girlfriend:
1. What you believed?
2. What believed you?
'What did you believe?'
10)Yesterday, I found a note on my door. I think that it was Miguel's. Today, I see Miguel at the university and I ask him:
1. Left you a note in my house yesterday or was it your girlfriend María?
2. You left a note in my house yesterday or was it your girlfriend María?
'Did you leave a note in my house, or was is your girlfriend María?'
24) My car is very dirty, and my mom told me:
1. When you took your car to be washed for the last time?
2. When took you your car to be washed for the last time?
'When was the last time that you took your car to be washed?'

informal) in different interrogative sentences. Items 3 and 24 focus on the use of the pronoun '*tú*' ('you') in wh-questions. In the former item, the wh-word is extracted from an argument position; while in item 24, the wh-word is an adjunct of the verb. In item 10, the use of the pronoun *tú* ('you') is tested in a yes/no question.

In the A-test, four out of the thirty-one scenarios test the acceptance or refusal of *that*-trace constructions.[148] Speakers of GS varieties do not accept this type of constructions if no overt complementizer '*que*' ('that') appears as a trace after the movement of an element such as '*quienes*' ('who'), see item 14 in figure 3.2. For this reason, in the four items created to test *that*-trace constructions, the number of possible answers increases to three (preverbal, postverbal subjects, or '*ninguna*' -'none of the above').[149] In figure 3.2., item 14 shows an example of a *that*-trace construction.

14) La pared de mi casa apareció pintada, y mi amigo me dijo que vio a las personas que lo hicieron. Así que le vuelvo a preguntar:

1. ¿Quiénes tú dijiste pintaron así la pared de mi casa?
2. ¿Quiénes dijiste tú pintaron así la pared de mi casa?
3. Ninguna

Figure 3.2. Example items of '*tú*' ('you' sg informal) form in the A-test, checking the acceptance/ refusal of *that*-trace constructions[150]

---

[148] *That-trace* constructions are explained in chapter 1.

[149] The last option ('*ninguna*' -'none of the above'-) was included in items examining *that*-trace constructions since, as already stated, these constructions are only accepted with an overt complementizer by most of the speakers of other Spanish varieties.

[150] My translation:

14) My house appeared painted, and my friend told me that he saw the people who painted it. So, I ask him again:

1. Who you said painted like that the wall of my house.
2. Who said you painted like that the wall of my house
   'Who did you say painted like that the wall in my house?'
3. None.

In item 14 (figure 3.2.), the person and number tested is '*tú*' ('you' sg informal), and the element that moved up is '*quienes*' ('who'-plural). Other Spanish varieties require the appearance of an overt complementizer '*que*' ('that') in these cases, such as:

(3.5.)

¿Quiénes (tú) dijiste (tú) QUE pintaron así la pared de mi casa?
Who (you) said (you) THAT painted like that the wall of my house
'Who did you say painted like that the wall in my house?'

In order not to make the questionnaires longer, a sample of *that*-trace constructions with only a few person and number subjects were included. The person and number of the subjects used in the *that*-trace constructions are *yo* ('I'), *tú* ('you' sg informal), *él* ('he'), and *ustedes* ('you' plural formal).

3.5.2.1.2. B-test: Interrogative sentences (three options: preverbal, postverbal and null)

The B-test was also designed to study the participants' competence in their use of subjects in interrogative sentences. The main difference between the A and B test is the number of possible answers the participants could choose from. While in the A-test, the participants only had two responses to choose from (preverbal and/or postverbal subjects), in the B-test they also had the possibility of having a null subject as an answer, as can be observed in figure 3.3.

18) Mateo quería comprar un auto de carreras, pero no pudo comprar ninguno porque no les quedaban en la tienda. El señor de la tienda dijo que él iba a traer más modelos en unas semanas. No sé qué pasó al final y pregunto:

1. ¿Él trajo algún auto de carreras al final?
2. ¿Trajo él algún auto de carreras al final?
3. ¿Trajo algún auto de carreras al final?

Figure 3.3. GJ with three options (B-test)[151]

The item in figure 3.3. shows the general overview of the items in the B-test. There is a scenario and three possible answers to choose from: a preverbal, a postverbal and a null subject. In item 18 (figure 3.3.), the possible answers test the participants' preference when using subjects in yes/no questions.

In the B-test, there were thirty-five scenarios: four of them test the participants' acceptance or refusal of *that*-trace constructions, and another three test the use of the expletive '*ello*' ('it'). These latter items (testing the acceptance/refusal of expletive subjects) provide valuable data about the speakers' preference with expletive subjects, and their preverbal or postverbal position. Figure 3.4. shows item 33 (extracted from the B-test), where the use of the expletives is being tested.

[151] My translation:
18) Mateo wanted to buy a race-car, but he could not buy any because there were none left in the store. The salesman told him that he will bring more models in a few weeks. I do not knoe what happened in the end, and I ask:

1. Did he bring any race-car?
2. Did bring he any race-car?
   'Did he bring any race-car?'
3. None.

33) Dos pingüinos están solos en el Polo Norte, y uno le pregunta al otro...

1. ¿Cuándo ello nevó?
2. ¿Cuándo nevó ello?
3. ¿Cuándo nevó?

Figure 3.4. GJ with expletive ('*ello*') constructions, B-test[152]

Item 33, in figure 3.4., presents a construction in which the refusal or acceptance of the expletive '*ello*' ('it') is being tested. In the latter case, the participant's preference for a preverbal or a postverbal position is also tested.

In the B-test, four out of the total of thirty-five items test *that*-trace constructions. As in the A-test, the items used to test this construction had one extra answer to choose from: 4. '*Ninguna*' ('none'). Figure 3.5. shows an example of a *that*-trace constructions in the B-test.

1) La niña le dijo a la mamá que ella no había cogido el libro, y la mamá lo encuentra en su mochila. La mamá le dice a la niña:

1. ¿Quién dijiste cogió el libro?
2. ¿Quién dijiste tú cogió el libro?
3. ¿Quién tú dijiste cogió el libro?
4. Ninguna.

Figure 3.5. '*That*-trace' construction in GJ with three options, B-test[153]

---

[152] My translation:
33) Two peguins are alone on the North Pole, and one asks the other...
1. When did it snow?
2. When did snow it?
'When did it snow?'
3. When snowed?
'When did it snow?'

[153] My translation:
1) The girl told her mom that she had not taken the book, and the book was in her back-pack. The mother tells her daughter:
1. Who said took the book?
'Who did you say took the book?'
2. Who did say you took the book?
'Who did you say took the book?'
3. Who did you say took the book?

The fourth answer was added because this type of construction[154] is rejected by many GS speakers.[155] Therefore, the lack of an overt complementizer '*que*' ('that') after wh-movement may result in ungrammaticality for some speakers. In this latter case, the answer 'none' ('*ninguna*') is expected. In the B-test there are four items testing this kind of construction, distributed among the following person and number subjects: '*yo*' ('I'), '*tú*' ('you' sg informal), and '*ustedes*' ('you' plural formal).

The B-test also presents a balanced distribution of the items, according to the type of question, and person and number. Each subject person and number ('*Yo*', 'I'; '*nosotros*', 'we'; etc) is tested in different interrogative sentences (wh-argument, wh-adjunct, yes/no), and some examples of *that*-trace sentences are also scattered along the B-test.

3.5.2.1.3. C-Test: Declaratives (three options: preverbal, postverbal and null)

The C-test consists of thirty-four items testing the participants' preference for preverbal, postverbal or null subjects in declarative sentences. In this task, the person and number of the subjects is balanced. The C-test includes two items to test the use of expletives in declaratives. Because of the nature of the C-test (testing declaratives), no *that*-trace constructions are included in this test. Figure 3.6. below is a prototypical sample of one of the items in the C-test, where the use of subjects in declarative sentences is tested.

---

4. None

[154] Refer to the literature review chapter (chapter 2) for more details on this construction.

[155] In general, GS speakers need to have an overt complementizer '*que*' ('that') after movement.

14) Estoy muy contenta de ver a los atletas paraolímpicos triunfar.

1. Llevaron muchas medallas de oro al podio.
2. Llevaron ellos muchas medallas de oro al podio.
3. Ellos llevaron muchas medallas de oro al podio.

Figure 3.6. GJ in declaratives, C-test[156]

Figure 3.6. shows the three possible answers to choose in declarative sentences: a null subject, a postverbal, and a preverbal one, respectively. In the same way, in figure 3.7., there is a sample item testing the use of expletives (construction with '*ello*' as a subject).

13) Pedro es español y dice que no puede creer el tiempo que hace en otros países en los que...

1. En verano ello llovió mucho.
2. En verano llovió ello mucho.
3. En verano llovió mucho.

Figure 3.7. GJ in declaratives (C-test), with '*ello*' constructions[157]

As illustrated in figure 3.7., in the expletive-type of constructions (where null subject languages will require a null expletive), there are three possible answers to choose from (preverbal and postverbal, and null expletives). In these expletive constructions, in many Spanish varieties, the only possible answer will be the null subject option.

---

[156] My translation:
14) I am very happy to see paraolympic athletes winning.
1. Took many gold medals to the podium.
'They took many golden medals to the podium.'
2. Took they many golden medals to the podium
'They took many golden medals to the podium.'
3. 'They took many golden medals to the podium.'

[157] My translation:
13) Pedro is Spaniard, and he says that he cannot believe how is te weather like in other countries, where...
1. In summer, it rained a lot.
2. In summer, rained it a lot.
' In summer, it rained a lot.'
3. In summer, rained a lot.
'In summer, it rained a lot.'

3.5.2.2. Oral corpus

Three oral tasks were also used to gather an oral corpus of sentential subjects in interrogative and declarative sentences. The oral corpus was recorded in a digital voice recorder, and later transcribed. Out of the four *pro*-drop properties analyzed in this dissertation, the oral tasks only study two of them: null subjects and subject-verb inversion. I did not consider the use of expletives or *that*-trace constructions in the oral tasks. Moreover, not all the verbs produced in the oral tasks were considered as part of the oral corpus to be analyzed. Only finite verbs from main clauses were part of the analysis.

Two out of the three tasks test the production of declaratives, whereas one of them elicits subjects in interrogative sentences. For two of the three oral reports, visual cues were provided. The different kinds of cues provided to the participants offer an oral corpus that ranges from more guided to less guided oral production. Starting from the most guided to the least one, the oral tasks are classified as follows:

- Guided: The retelling of a frog-story. The participants were handed the drawing-based book *A boy, a dog, a frog and a friend* by Mercer Mayer and Marianna Mayer (1971). They were asked to look through it, and later to retell it, while being recorded. In order to keep a balanced study, I only analyzed the first fifteen finite verbs[158] of each participant.
- Less guided: the second oral production task consisted of a role-play activity in a court.[159] The participant and the interviewer had a similar script where

[158] Refer to appendix 2 for further details about the verbs that formed part of the study, and those excluded.
[159] Following Márquez Reiter and Placencia (2005: 221): "One type of research instrument that has been employed to enable researchers to collect a large enough number of speech acts and control social variable is role play. In role play, informants participate in simulated social situations or scenarios, generally in

each interlocutor had his/her role in the trial -the participant was the judge and the interviewer played the role of all the witnesses-. In this task, I coded only twenty verbs per participant.[160]

- Minimally guided: The minimally guided oral task had no visual cues. Following the Labovian models of oral narratives, in particular Flores-Ferrán's (2002) elicitation method, the researcher asked the participants to tell a personal story that influenced them, or talk about a person who had influenced them. In this task, I coded fifty verbs per person.[161]

The following table summarizes some of the features of the different oral tasks: the type of sentence being tested, the *pro*-drop properties addressed with each oral task, the person and number being studied in each task, the existence of visual cues, and the level of guidance.

Table 3.9. Summary of properties of the three oral tasks used

	Sentence type	**Main person and number tested**	**Properties tested[162]**	**Visual cues**	**Guidance**
Retelling: Frog story	Declaratives	***Él/ ella*** ('he/she') ***Ellos/-as*** ('They')	1) Null 2) SV and VS	Yes	+++
Role-play: 'Court' task	Interrogatives	***Usted*** ('you' sg. formal) ***Él/ ella*** ('he/she)	1) Null 2) SV and VS	Yes	++
Personal story	Declaratives	***Yo*** ('I') ***Él/ ella*** ('he/she) ***Nosotros*** ('we')	1) Null 2) SV and VS	No	+

dyads, 'intended to throw light upon the role/rule contexts governing 'real' life social episodes', Cohen *et al*. (2000, p. 370)."

[160] Refer to appendix 2 for further details about the verbs that formed part of the study, and those excluded.

[161] Refer to appendix 2 for further details about the verbs that formed part of the study, and those excluded.

[162] In the oral tasks, expletives are only descriptively analyzed, since the number of total instances in these tasks was not quantitative significant to be considered otherwise.

By selecting a fixed number of verbs per oral task from each person, a balanced contribution of verbs per group is maintained. The number of selected verbs per task was established after looking at the total number of verbs per participant in each task, and finding a number of verbs that most of the participants could satisfy. In that way, the results will not be biased by the intervention of a participant over the rest. I present below a description of each one of the oral tasks used in the study.

3.5.2.2.1. Frog-story: Guided oral production of declarative sentences

The most guided oral production task consists on retelling a frog-story. The frog-story selected was *A boy, a dog, a frog and a friend* by Mercer Mayer and Marianna Mayer (1971). This book has twenty-eight drawings with no words. The procedure used in this oral task was as follows: the researcher gave the book to the participants, they looked through it, and once the participants announced that they were ready to retell the story, they closed the book and the researcher recorded the story with a digital voice-recorder.

This guided oral production task will provide comparable data from all the participants to analyze the use of subjects (pronominal and lexical) when retelling one common story. In this kind of task, the use of subjects should be very similar among the participants, if their use is based on the same pragmatic values. The main purpose of this task is the production of declarative sentences. Because of the nature of the task, the production of third person subjects was expected to be the most frequent subject produced.

I coded the first fifteen verbs of each participant, unless they did not produce enough, obtaining a total of 890 verbs (produced by the three groups).[163] Refer to appendix 2 for details about the verbs that formed part of the study.

3.5.2.2.2. Role-play (in a court): Semi-guided oral production of interrogative sentences

The role-play consisted of acting a role-play task situated in a trial at court. Both the participant and the interviewer had a similar script with the following information:

- Scenario. A crime was committed: a rich businesswoman was killed in the Dominican Republic.
- Pictures of possible suspects and dead person. A drawing of the dead person and the different suspects of the crime was presented: her husband, the maid, and the mailman.
- Role in the trial. The participant was told what his/her role in the trial was to be the judge, and the researcher (me) played the role of all the witnesses and suspects.
- Scenarios and verbal cues. The participants were provided with four different drawings that showed possible scenarios lived in the court during the trial; i.e., moments in which the suspects and witnesses gave their declaration. Some verbal cues were written underneath each picture, in order to provide extra

[163] Most of the participants produced enough number of verbs. Refer to table A.3.1. in appendix 3 to observe the total number of verbs per group.

help and support when the judge (i.e., the participant) could not think of any more questions.[164]

I conducted the role-play face-to-face with the participants. Each participant was asked to perform the role of the judge in the trial, while the researcher played the role of all the different witnesses and suspects of the crime. Since the researcher was playing more than one role in the trial, the participant was asked to clarify who is the person being interviewed in each occasion by stating the name of the person. One possible way to distinguish who was the witness being interviewed was by eliciting sentences such as: '*Que entre el cartero*' ('Let the mailman enter the room'). The nature of the task promotes the production of second person (especially '*usted*' -'you' sg. formal-), and third person subjects (especially '*él/ella*' –'he/she'-). The whole conversation was recorded using a digital voice recorder, and later transcribed into a word document.[165]

The main goal of this task was the oral production of interrogative sentences. This oral corpus provided data to compare the participants' performance (through oral data) and their competence (through A-test and B-test) when using subjects in different interrogative sentences. The total number of verbs analyzed in this task by the three groups is 1160. I coded the first twenty verbs of each participant, unless they did not produce enough.

---

[164] In a pilot study, I observed that for some participants it was difficult to elicit questions without providing them any verbal cues. Consequently, I added some verbal cues and the results showed a considerable improvement.

[165] The transcription was later analyzed and coded into SPSS to perform statistical runs.

3.5.2.2.3. Personal story: Free oral production of declarative sentences

Out of the three different oral production tasks, this one provides the freest sample of oral data; i.e., the information is not as guided as in the other two oral production tasks. In this task, the interviewer asked the participant to tell a story that influenced their lives (similar to Flores-Ferrán, 2002), or to talk about a person that influenced them (following the Labovian design for oral narratives). The personal stories ranged from love stories (first love, ending of relationships) to retelling of old days in school, their arrival to a country, etcetera. The main goal of this task consists of the production of oral declarative sentences. Since the oral cue was very broad, the subject person and number could range from the gamut of first person -'*yo*' ('I') and '*nosotros*' ('we')- to third person –'*él/ella*' ('he/she') and '*ellos/-as*' ('they'). In this task, the first fifty verbs of each participant were analyzed, unless they did not produce enough of them.[166] The total number of verbs obtained from the three groups of participants for this task is 2912. Refer to appendix 2 for further information about the verbs that formed part of the codification.

In the following chapter, I present the results obtained in testing the hypotheses formulated in chapter 1.

[166] Most of the participants produced enough number of verbs. Refer to table A.3.1. in appendix 3 to observe the total number of verbs per group.

Chapter 4. Results

4.1. Introduction

In this chapter, I present the results obtained in different tasks (GJs and oral reports) with regard to four of the *pro*-drop properties (null subjects, subject-verb inversion, expletives, and *that*-trace filter), as they are represented in the tasks performed by the three groups of DS speakers. This chapter is divided as follows: In the first part of this chapter (section 4.2.), I present data from the participants' competence in four of the properties of the *pro*-drop parameter, through the analysis of the GJ tasks. In the second part of the chapter (section 4.3.), I analyze the participants' performance on two of the *pro*-drop properties (null subjects and subject-verb inversion) through the analysis of three oral tasks. In both parts, first I present the results obtained in interrogative sentences, and secondly I present the results obtained in declarative ones, where applicable. The data are first presented as a comparison between the two monolingual groups (El Cibao and Santo Domingo); and second, as a comparison between the bilingual group and the two monolingual groups (El Cibao and Santo Domingo). Recall that in the bilingual group (which included eight subjects born in the U.S., eight born in Santo Domingo, and four born in El Cibao), there might be potential dialectal variation in null subject patterns, reflective of the variation that may be found on the island.

In order to have a clear and broad view of the linguistic representation of the participants in the study, the tables are presented in detail. On some occasions, it will be necessary to comment on the detailed data, whereas on other occasions only some of the data will be discussed. In the latter case, I will only comment on the shaded cells. For instance, in some tables both overt and null subjects will be reported, although the focus

may only be on overt subjects (preverbal and postverbal), and not on null subjects. It should also be noted that in some of the tables only one chi-square and *p* value will be presented under them, whereas other tables will show more than one chi-square and *p* value. Since many different variables are cross-tabulated in each table, the chi-squares and *p* values of some of these variables will be presented under the table. However, when it is necessary and if the *p* values are statistically significant, reference to the chi-squares and *p* values of some other variables will be made in the body of the text. Conversely, if the *p* values are not statistically significant, the actual value will not be presented in the body of the text. In the analysis of the statistical significance of the results, a *p*[167] value of .05 on the Pearson chi-square test will be considered as having statistical significance (Downing and Clark, 1989; Spiegel *et al.*, 1999), however a *p* value of .10 can still be considered as statistically significant (Bernard, 2000: 536). In each table, the chi-squares and *p* values will be obtained after computing all the variables in the table. The total number of items (N) computed in the cross-tabulations is presented in the title of each table. It should be noted also that some tables cross-tabulate more items than others, therefore, the number of tokens will differ. For example, the number of tokens will be normally higher in tables that cross-tabulate more than one task; whereas in tables that present data from only one task, the number of items will be normally be lower. Similarly, tables illustrating the data obtained in the cross-tabulatation of more than one DS group will normally show a higher number of tokens than tables that present the results from only one DS group.

[167] In the SPSS output, the *p*. value appears as 'Asymp. Sig.' (Morgan et al., 2006: 107).

4.2. Results from the Grammaticality Judgment tasks

The GJ tasks analyze the participants' competence in four of the properties of the *pro*-drop parameter. These four properties are: null subjects, subject-verb inversion, expletives, and *that*-trace filter. Recall that, the A-test addresses the selection of overt subjects in interrogative sentences. In the A-test, there are only two possible answers to choose from: preverbal and postverbal subjects.[168] Although the B-test also studies the selection of subjects in interrogative sentences, there are three possible answers to choose from: preverbal, postverbal, and null. And in the C-test, the participants' selection of preverbal, postverbal, and null subjects in declarative sentences is addressed.

4.2.1. Overt vs. null subjects: Results from the GJs (B-test and C-test) by the two monolingual groups

In this section, I present the results of the monolinguals' selection of overt or null subjects in two GJ tasks (B-Test and C-Test).[169] It has been claimed that most of the divergent properties of DS have been attributed to speakers of the El Cibao area (Henríquez Ureña, 1940; Toribio, 2000a). As indicated in the previous chapter, the monolingual group is subdivided according to region in the Dominican Republic (El Cibao and Santo Domingo). This division provides a better understanding of how the *pro*-drop properties are realized in two different areas of the island. Following the hypotheses presented in chapter 1, in this section, I address the way in which overt and null subjects are selected among the monolingual participants from El Cibao and Santo Domingo.

---

[168] No null subjects were presented as an option.
[169] The A-test does not have the option of having a null subject. Therefore, the results from the A-test are not presented in this section (4.2.1.).

In chapter 1, I presented three hypotheses in relation to the nominal value in Agr: the first, second, and fourth hypotheses. Starting with the first two hypotheses (which refer to the different nominal strength values in Agr), I hypothesized that if monolingual DS speakers prefer the [- strong] nominal features in Agr, a higher percentage of overt subjects than null ones should be found. On the other hand, if DS speakers (in its monolingual variety) are changing the nominal features in Agr towards the [+ strong] ones, then the percentage of null subjects should be higher than the percentage of overt ones. In table 4.1. below, I present the cross-tabulation of the speakers from El Cibao and Santo Domingo according to the overt or null selection of subjects in interrogatives in the B-test (a GJ task). In table 4.1. the total number of subjects (N = 1123) refers to the total amount of subjects chosen in the B-test by the two monolingual groups of speakers, i.e., it represents all the answers provided by the two monolingual groups of participants. Recall that the participants could choose more than one answer. In the B-test, one of the participants from El Cibao selected more than one answer, and two participants from Santo Domingo also selected more than one answer.

Table 4.1.: Cross-tabulation of speakers from El Cibao and Santo Domingo with regard to overt and null subjects in interrogatives – B-Test (N = 1123)

B-test	**El Cibao**	**Santo Domingo**	**Total overt/null**
Overt subjects	N = 412 73.4%	N = 388 69.0%	N = 800 71.2%
Null subjects	N = 149 26.6%	N = 174 31.0%	N = 323 28.8%
Total El Cibao/ Santo Domingo	N = 561 100.0%	N = 562 100.0%	N = 1123 100.0%

Chi-square: *2.654* *p=<.103>*

As illustrated in table 4.1., there is no statistically significant relationship between the selection of overt and null subjects, and the origin of the monolingual speakers; i.e., El

Cibao or Santo Domingo (*p* value is of .103). In general, as observed in the column of 'Total overt/null' subjects in table 4.1., both groups have a higher percentage of overt subjects (71.2%) than null ones (28.8%) in the B-test. These data suggest that the two monolingual groups show a tendency to adopt the [- strong] nominal features in Agr. Consequently, they tend to opt for overt subjects over null ones; although the selection of null subjects indicates that the [+ strong] nominal value in Agr is also available in the monolinguals' competence (El Cibao's and Santo Domingo's). The higher percentage of overt subjects is more noticeable in the case of the participants from El Cibao. They produced 73.4% of overt subjects versus 26.6% of null ones. On the other hand, the group from Santo Domingo presents 69.0% of overt subjects versus 31.0% of null ones. In general, the two monolingual groups show a similar pattern of overt and null subjects in the B-test. This shows that the origin in the Dominican Republic does not seem to be affecting the selection of overt and null subjects differently.

In conclusion, in the B-test, the two monolingual groups favor the overt form of subjects in interrogative sentences, but the selection of null subjects (although it is a low percentage) shows that the two groups have available in their competence the [+ strong] nominal values in Agr. Due to the lack of statistical significance in table 4.1., no conclusions can be reached from these data, and the study of further variables is suggested.

The fourth hypothesis is related to the first and second hypotheses. In my fourth hypothesis, I proposed that if DS tends towards a [- strong] nominal feature in Agr, this feature should be maintained in both declarative and interrogative sentences (not only in interrogative ones). But, on the other hand, if DS is in the process of change towards the

[+ strong] nominal features in Agr, then I expect to find a higher percentage of null subjects than of overt ones, as proposed in my second hypothesis.[170] In order to observe that, in table 4.2., I present the data from the cross-tabulation of speakers from El Cibao and Santo Domingo with regard to overt and null subjects in the C-test, i.e., their competence in declarative sentences. The total number of subjects (N = 1243) represents the total number of answers selected by the two monolingual groups in the C-test. In the C-test, only one participant from El Cibao selected more than one answer in the C-test, whereas all the participants from Santo Domingo chose only one answer.

Table 4.2.: Cross-tabulation of speakers from El Cibao and Santo Domingo with regard to overt and null subjects in declaratives – C-Test (N = 1243)

C-test	El Cibao	Santo Domingo	Total overt/null
Overt subjects	N = 418 67.1%	N = 408 65.8%	N = 826 66.5%
Null subjects	N = 205 32.9%	N = 212 34.2%	N = 417 33.5%
Total El Cibao/ Santo Domingo	N = 623 100.0%	N = 620 100.0%	N = 1243 100.0%

Chi-square: *.231* *p=<.631>*

As observed in table 4.2., in the C-test no statistically significant relationship can be observed between the selection of overt and null subjects, and the two monolingual groups (El Cibao or Santo Domingo), since the chi-square is .231, and *p* value is of .631. Despite these findings, a review of the percentages is presented. As observed in the last column in table 4.2. ('Total overt/null'), both groups of monolingual DS speakers (from El Cibao and Santo Domingo) favor overt subjects (66.5%) over null ones (33.5%) in the C-test. The percentage of overt and null subjects according to the participants' origin is very similar. Specifically, the group from El Cibao presents 67.1% of overt subjects, and

[170] See chapter 1 for research questions and hypotheses.

32.9% of null ones. On the other hand, the Santo Domingo group has 65.8% of overt subjects, and 34.2% of null ones. It can be concluded that in the C-test, both groups of monolingual speakers show a similar pattern in the selection of overt and null subjects. These data suggest that, the [+ strong] nominal value in Agr is present in both groups, although the two groups show a tendency towards the overt selection of subjects. However, the lack of statistical significance of the data in table 4.2. suggests that no conclusions can be reached about this hypothesis.

As observed in tables 4.1. and 4.2., in interrogative (B-test) and in declarative (C-test) sentences, both groups of monolingual speakers show a preference for overt subjects over null ones. This tendency to select overt subjects over null ones is more marked in interrogative sentences (71.2%) than in declarative ones (66.5%). According to the participants' origin in the Dominican Republic, the participants from El Cibao show a higher percentage of overt subjects in the B-test and C-test (73.4% and 67.1%, respectively) than the participants from Santo Domingo in the same tasks (69.0% and 65.8%). The two groups of participants show very similar patterns in both tasks (B-test and C-test). Therefore, these percentages on tables 4.1. and 4.2. suggest that, in the tasks testing the participants' competence, the [+ strong] nominal value in Agr is observed in both sentence types (i.e., in interrogatives, and in declaratives). Nonetheless, the lack of statistical significance of the data cross-tabulated in both tasks (selection of overt or null subjects, and the origin of the two monolingual groups -El Cibao and Santo Domingo-) suggests that further study of other variables is needed.

With respect to the selection of overt and null subjects according to the person and number of the subject, I hypothesized that if DS is going through a process of change

towards a [- *pro*-drop] type of language, similar to the one undergone by Brazilian Portuguese –BP- (Duarte, 2000), then I should find that the loss of null subjects should follow a hierarchical order: 2 > 1 > 3. Specifically, the [+ strong] nominal values of Agr are lost in the following order: initially in second person, then in first person, and in third person. Note also that Italian (a [+ *pro*-drop] language) seems to have also more overt subjects in first and second person than in third person (De Oliveira, 2000: 50). If DS is undergoing the same change as BP, in table 4.3., the highest percentage of overt subjects should be found in second person and the smallest percentage should be found in third person. First person subjects should show a percentage of overt subjects in-between second and third person subjects. Table 4.3. shows the percentage of overt subjects (according to person and number), as selected by the two monolingual groups of participants in the B-test.

Table 4.3.: Cross-tabulation of speakers from El Cibao and Santo Domingo with regard to overt subjects and person and number of verb in interrogatives – B-test (N = 1123)

B-test		**El Cibao**	**Santo Domingo**
1st: *Yo, nosotros*	Overt	N = 85 70.8%	N = 68 56.7%
	Null	N = 35 29.2%	N = 52 43.3%
	Total 1st	N = 120 100.0%	N = 120 100.0%
2nd: *Tú, usted, ustedes*	Overt	N = 127 70.2%	N = 120 66.3%
	Null	N = 54 29.8%	N = 61 33.7%
	Total 2nd	N = 181 100.0%	N = 181 100.0%
3rd: *Él/ella, ellos/as*	Overt	N = 200 76.9%	N = 200 76.6%
	Null	N = 60 23.1%	N = 61 23.4%
	Total 3rd	N = 260 100.0%	N = 261 100.0%

El Cibao: Chi-square: *3.030* *p=<.220>*
Santo Domingo: Chi-square: *16.263* *p=<.000>*

As illustrated in the gray cells of table 4.3., the percentage of overt subjects in the B-test (according to the person and number of the subjects) shows a difference in their distribution according to the origin of the participants.

In El Cibao group, first, second, and third person subjects show similar percentages of overt subjects. Although these three percentages are very close, there is a slightly higher percentage of overt subjects in third person subjects (76.9%), followed by first person subjects (70.8%), and finally by second person subjects (70.2%). This is the opposite order in which BP lost its null subjects. These similar percentages in all person subjects suggest that the nominal features in Agr affect in a similar manner all person subjects. Nonetheless, the El Cibao group does not show a statistically significant relationship between the variables examined in table 4.3.

On the other hand, the participants from Santo Domingo show very different percentages of overt subjects according to person. As observed in table 4.3. above the participants from Santo Domingo also show the highest percentage of overt subjects with third person subjects (76.6%), followed by second person subjects (66.3%), and finally by first person subjects (56.7%). This difference in the Santo Domingo percentages suggests that, in the case of the participants from Santo Domingo, the different subject persons (first, second, and third) may be affected differently by the nominal features in Agr. The Santo Domingo participants show a hierarchy in the way the strength value of Agr is affecting the different subject persons in the B-test. For instance, the Santo Domingo speakers seem to be losing the [+ strong] nominal features in Agr in third person subjects first. The cross-tabulation in table 4.3. illustrates that the results from the Santo Domingo group are statistically significant (chi-square is 16.263, and *p* value is of .000).

In sum, in the B-test, none of the two monolingual groups shows similarity with the way BP lost null subjects (i.e., the loss of the [+ strong] nominal values of Agr). The two monolingual groups (El Cibao and Santo Domingo) show that the [+ strong] nominal features in Agr seem to be less available in third person subjects than in the other subjects.

The distribution of overt subjects according to the person and number is also examined in the C-test, i.e., in declarative sentences. Table 4.4. presents a cross-tabulation of speakers from El Cibao and Santo Domingo, with regard to the overt selection of subjects in the C-test, according to the person and number of the subjects.

Table 4.4.: Cross-tabulation of speakers from El Cibao and Santo Domingo with regard to overt subjects and person and number of verb in declaratives – C-test (N = 1243)

C-test		**El Cibao**	**Santo Domingo**
1st: *Yo, nosotros*	Overt	N = 90 55.9%	N = 86 53.8%
	Null	N = 71 44.1%	N = 74 46.3%
	Total 1st	N = 161 100.0%	N = 160 100.0%
2nd: *Tú, usted, ustedes*	Overt	N = 165 68.2%	N = 163 67.9%
	Null	N = 77 31.8%	N = 77 32.1%
	Total 2nd	N = 242 100.0%	N = 240 100.0%
3rd: *Él/ella, ellos/as*	Overt	N = 163 74.1%	N = 159 72.3%
	Null	N = 57 25.9%	N = 61 27.7%
	Total 3rd	N = 220 100.0%	N = 220 100.0%

El Cibao: Chi-square: *14.145* *p=<.001>*
Santo Domingo: Chi-square: *14.899* *p=<.001>*

As observed in the gray cells of table 4.4., the distribution of overt and null subjects according to the subject person and number in the C-test shows a very similar distribution on the two monolingual groups. The group from El Cibao and from Santo Domingo accepted more overt subjects with third person subjects (74.1% and 72.3%, respectively), followed by second person subjects (68.2%, and 67.9%, respectively), and finally in first person subjects (55.9% and 53.8%). The two monolingual groups follow a similar pattern in the acceptance of overt subjects. Specifically, the [+ strong] nominal values in Agr seem to be less available in third person subjects than in the other two person subjects (first and second). Therefore, in the C-test, the overt selection of subjects does not follow the same hierarchy as the one observed in BP. The chi square and *p* values of the

variables cross-tabulated in table 4.4. show that there is a statistically significant relationship between the variables (*p* value is of .001 for the two monolingual groups).

After observing tables 4.3. and 4.4., one can conclude that the hierarchy followed by BP and the one followed by DS differ. In the B-test and C-test, the two monolingual groups show a similar pattern: the highest percentage of overt subjects in third person subjects, followed by second person subjects, and finally by first person subjects. There is a little exception to this order in the results obtained from the El Cibao group in the B-test, who show a slightly higher percentage of overt subjects in first person (70.8%) than in second person (70.2%). Tables 4.3. and 4.4. show similar percentages of overt subjects according to the person, with the exception of the El Cibao participants in the B-test. The two groups in the C-test (declarative sentences), and the Santo Domingo group in the B-test (interrogative sentences), show in between 72.3% and 76.9% overt subjects in third person, between 66.3% and 68.2% overt subjects in second person, and between 53.8% and 56.7% overt subject in first person subjects. Neither of the two monolingual groups shows evidence of having lost the [+ strong] nominal values in Agr. On the other hand, a similar pattern of null subject acceptance can be found among the Santo Domingo participants in interrogative and declarative sentences, and among the El Cibao participants in declarative sentences. According to these data (especially the data from El Cibao), it can be concluded that the loss of [+ strong] nominal values in Agr seems to follow an ordered pattern: according to the subject person, it initially affects third person subjects; according to the origin in the Dominican Republic, it affects most the participants from El Cibao; and according to the type of sentence, it seems to affect more interrogative sentences than declarative ones. A possible explanation for the difference

between patterns in interrogative and declarative sentences is that in interrogative sentences focus is clearly defined as the wh-word, whereas in declarative sentences different elements can be focalized.

4.2.2. Subject-verb inversion: Results from the GJs (A-test, B-test and C-test) by the two monolingual groups

In this section I present the monolingual participants results in the three GJ tasks (A-test, B-test, and C-test) according to the preverbal or postverbal position of subjects. The A-test and B-test provide evidence of the position of subjects in interrogative sentences, and the C-test refers to the position of subjects in declarative sentences. Since subject-verb inversion has traditionally been considered one of the properties associated with the *pro*-drop parameter, I hypothesized that if DS monolingual speakers have a preference for the [- strong] verbal features in T (over the [+ strong] ones), then they should exhibit a high percentage of selection of overt preverbal subjects (irrespectively of the pronominal or lexical nature of the subjects) in all sentence types, especially in declarative sentences (refer to chapters 1 and 2 for further details on the position of subjects in declarative and interrogative sentences). Tables 4.5.- 4.7. present data regarding this hypothesis (results from the A-test, B-test, and C-test, respectively).

Table 4.5. shows the cross-tabulation of speakers from El Cibao and Santo Domingo with regard to the preverbal position of lexical and pronominal subjects in the A-test.[171]

[171] In the A-test, one of the participants from El Cibao selected more than one answer (i.e., this participant selected the two options: preverbal and postverbal subjects), and none of the Santo Domingo participants selected more than one answer (i.e., all of them selected either preverbal or postverbal subjects).

Table 4.5.: Cross-tabulation of speakers from El Cibao and Santo Domingo with regard to preverbal pronominal and lexical subjects in interrogatives –A-test (N = 1083)

A-test		Preverbal	Postverbal	Total
El Cibao	**Pronominal**	N = 189 39.2%	N = 293 60.8%	N = 482 100.0%
	Lexical DP	N = 22 36.1%	N = 39 63.9%	N = 61 100.0%
	Total per position	N = 211 38.9%	N = 332 61.1%	N = 543 100.0%
Santo Domingo	**Pronominal**	N = 267 55.6%	N = 213 44.4%	N = 480 100.0%
	Lexical DP	N = 44 73.3%	N = 16 26.7%	N = 60 100.0%
	Total per position	N = 311 57.6%	N = 229 42.4%	N = 540 100.0%

El Cibao: Chi-square: *.226* *p=<.635>*
Santo Domingo: Chi-square: *6.848* *p=<.009>*

As shown in the gray cells in table 4.5., the group from Santo Domingo shows a higher percentage of both preverbal pronominal and lexical subjects (55.6% and 73.3%, respectively) than the participants from El Cibao (39.2% and 36.1%, respectively) in the A-test (interrogative sentences). As the percentages in table 4.5. illustrate, the group from El Cibao shows a preference for postverbal subjects, whereas the Santo Domingo group demonstrates higher percentages of preverbal subjects than postverbal ones. The participants from El Cibao do not show statistically significant data between the variables studied in table 4.5.

On the other hand, the participants from Santo Domingo prefer more preverbal lexical subjects (73.3%) than preverbal pronominal ones (55.6%). Unlike the El Cibao group, the percentages of preverbal subjects selected by the Santo Domingo group are different according to the pronominal and lexical nature of the subject. The latter group (Santo Domingo) seems to be in the process of adopting the [- strong] verbal features in T with lexical subjects, but this cannot be confirmed with their pronominal subjects. The

data obtained from the Santo Domingo group is statistically significant (chi-square is 6.848 and *p* value is of .009). Therefore, the results provided in this task (A-test) by the Santo Domingo group should be taken into consideration. These results indicate that the Santo Domingo participants accept more preverbal subjects than postverbal ones, specially preverbal lexical ones.

The gray cells in table 4.6. present the cross-tabulation of the two monolingual groups of speakers with regard to preverbal pronominal and lexical subjects in the B-test. Since the B-test has three possible answers to choose from (null, preverbal, and postverbal), the following table shows the percentage of null, preverbal, and postverbal subjects chosen by each monolingual group. The total number of preverbal subjects (N = 385) refers to all the instances in which the two monolingual groups selected preverbal subjects in the B-test.

Table 4.6.: Cross-tabulation of speakers from El Cibao and Santo Domingo with regard to preverbal pronominal and lexical subjects in interrogatives – B-test (N = 1123)

B-test		**Null**	**Preverbal**	**Postverbal**	**Total per subject type**
El Cibao	**Null**	N = 149 100.0%	N = 0 0.0%	N = 0 0.0%	N = 149 100.0%
	Pronominal	N = 0 0.0%	N = 144 39.5%	N = 221 60.5%	N = 365 100.0%
	Lexical DP	N = 0 0.0%	N = 24 51.1%	N = 23 48.9%	N = 47 100.0%
	Total per position	N = 149 26.6%	N = 168 29.9%	N = 244 43.5%	N = 561 100.0%
Santo Domingo	**Null**	N = 174 100.0%	N = 0 0.0%	N = 0 0.0%	N = 174 100.0%
	Pronominal	N = 0 0.0%	N = 191 57.0%	N = 144 43.0%	N = 335 100.0%
	Lexical DP	N = 0 0.0%	N = 26 49.1%	N = 27 50.9%	N = 53 100.0%
	Total per position	N = 174 31.0%	N = 217 38.6%	N = 171 30.4%	N = 562 100.0%

El Cibao: Chi-square: *564.166* *p=<.000>*
Santo Domingo: Chi-square: *563.703* *p=<.000>*

When observing the total number of subjects per position, one finds that the Santo Domingo group shows a higher percentage of preverbal subjects (38.6%) than the group from El Cibao (29.9%). As seen in the darker cells in table 4.6., the selection of preverbal subjects in the B-test according to the pronominal and lexical nature of the subject shows that the group from El Cibao accepted more preverbal lexical DPs (51.1%) than pronominal ones (39.5%), whereas the group from Santo Domingo selected more preverbal pronominal subjects (57.0%) than lexical ones (49.1%). In general, the results obtained in the B-test by the two monolingual groups do not show evidence that the [-strong] verbal value in T has been adopted by any of the two groups. Adopting the [-strong] verbal values in T would lead us to expect that all the subjects would be preverbal, and this is not the case in table 4.6. In the B-test, there is a clear statistically

significant relationship between the variables in both monolingual groups, since *p* value is of .000 in both cases.

The comparison of tables 4.5. and 4.6. shows that the results of pronominal and lexical preverbal subjects are not consistent for both tests (A-test and B-test), although these two tests study subject preference in interrogative sentences. Having the possibility of choosing null subjects in the B-test affects the total selection of preverbal subjects by both groups. That is, the two monolingual groups show a lower percentage of preverbal subjects in the B-test than in the A-test. The two monolingual groups maintain a similar percentage of preverbal pronominal subjects in both tasks (A-test and B-test). Participants from El Cibao have 39.2% pronominal preverbal subjects in the A-test, and 39.5% in the B-test. In a similar manner, the participants from Santo Domingo selected 55.6% pronominal preverbal subjects in the A-test, and 57.0% in the B-test. But, this is not observed with lexical preverbal subjects. These results suggest that the position of pronominal subjects in interrogative sentences is similar across tests for each monolingual group. This suggests that the pronominal nature of the subject is a good indicator of its acceptance in preverbal position. On the other hand, each monolingual group has a different acceptance of lexical preverbal subjects in each task. The El Cibao group selected 36.1% preverbal lexical subjects in the A-test, and 51.1% in the B-test. Conversely, the Santo Domingo group selected 73.3% preverbal lexical subjects in the A-test, and 49.1% in the B-test.

The preverbal position of subjects in declarative sentences can be observed in table 4.7. Table 4.7 shows the cross-tabulation of speakers from El Cibao and Santo Domingo with regard to the preverbal position of pronominal and lexical subjects. The

total number of instances addressed in table 4.7. (N = 554) refer to the amount of instances in which preverbal subjects were selected in the C-test by the two monolingual groups.

Table 4.7.: Cross-tabulation of speakers from El Cibao and Santo Domingo with regard to preverbal pronominal and lexical subjects in declaratives – C-test (N = 1243)

C-test		**Null**	**Preverbal**	**Postverbal**	**Total**
El Cibao	**Null**	N = 205 100.0%	N = 0 0.0%	N = 0 0.0%	N = 205 100.0%
	Pronominal	N = 0 0.0%	N = 199 55.4%	N = 160 44.6%	N = 359 100.0%
	Lexical DP	N = 0 0.0%	N = 36 61.0%	N = 23 39.0%	N = 59 100.0%
	Total per position	N = 205 32.9%	N = 235 37.7%	N = 183 29.4%	N = 623 100.0%
Santo Domingo	**Null**	N = 212 100.0%	N = 0 0.0%	N = 0 0.0%	N = 212 100.0%
	Pronominal	N = 0 0.0%	N = 262 76.4%	N = 81 23.6%	N = 343 100.0%
	Lexical DP	N = 0 0.0%	N = 57 87.7%	N = 8 12.3%	N = 65 100.0%
	Total per position	N = 212 34.2%	N = 319 51.5%	N = 89 14.4%	N = 620 100.0%

El Cibao: Chi-square: *623.957* *p=<.000>*
Santo Domingo: Chi-square: *626.225* *p=<.000>*

Table 4.7. shows in the gray cells that, in the C-test, the participants from Santo Domingo selected more preverbal subjects than the speakers from El Cibao. As observed under table 4.7., the two groups of monolingual participants show a statistically significant relationship between the variables (*p* value is of .000). The type of subjects (pronominal and lexical) and the origin of the monolingual participants (El Cibao and Santo Domingo) show that lexical subjects are selected preverbal more frequently (61.0% and 87.7%, respectively) than pronominal ones (55.4% and 76.4%, respectively). Specifically, the speakers from El Cibao selected 61.0% of the lexical subjects in a preverbal position, and the Santo Domingo group preferred 87.7% of the lexical subjects in a preverbal position.

On the other hand, out of all the overt pronominal subjects selected in the C-test, the group from El Cibao preferred 55.4% preverbally, and the Santo Domingo group opted for 76.4% preverbally. In the case of the C-test, i.e., when subjects are selected in declarative sentences, the lexical nature of the subject seems to influence the participants' choice for its preverbal position in the sentence. It can be concluded that in general, the Santo Domingo group shows a higher preference for preverbal pronominal and lexical subjects in the C-test than the El Cibao group.

Tables 4.5. – 4.7. illustrate that, in general, the Santo Domingo group preferred more preverbal subjects (irrespective of the pronominal or lexical nature of the subject) in both interrogative and declarative sentences (A-test: 57.6%, B-test: 38.6%, and C-test: 51.5%) than the group from El Cibao (A-test: 38.9%, B-test: 29.9%, and C-test: 37.7%). As it was predicted in my hypothesis, the two monolingual groups of participants show a high percentage of preverbal subjects. Furthermore, the percentage of preverbal subjects in declarative sentences (C-test) is higher than in the two interrogative tests (A-test and B-test). The percentages of preverbal lexical subjects tend to be higher than the pronominal ones. In declarative sentences, the two monolingual groups selected more preverbal lexical subjects than preverbal pronominal ones. But in interrogative sentences, there are two exceptions to this pattern: the first one is in the A-test, and the second one in the B-test. In the A-test, El Cibao shows a higher percentage of preverbal pronominal subjects (39.2%) than lexical ones (36.1%). The second case is found in the B-test in the Santo Domingo group, in which the percentage of preverbal pronominal subjects (57.0%) surpasses the lexical ones (49.1%). Nonetheless, it is worth noting that both monolingual

groups exhibit similar patterns in the frequencies of preverbal subjects, i.e., the results obtained with pronouns are more consistent than with lexical DPs.

According to hypothesis six (as presented in chapter 1), if DS monolingual speakers only have the [+ strong] verbal features in T available to them, then I should expect to find postverbal subjects (irrespective of their pronominal or lexical nature). In order to observe this preference, I present tables 4.8. – 4.10. (results from the A-test, B-test, and C-test, respectively).

Table 4.8. presents the cross-tabulation of speakers from El Cibao and Santo Domingo with regard to postverbal pronominal and lexical subjects in the A-test (interrogative sentences).

Table 4.8.: Cross-tabulation of speakers from El Cibao and Santo Domingo with regard to postverbal pronominal and lexical subjects in interrogatives – A-test (N = 1083)

A-test		**Preverbal**	**Postverbal**	**Total**
El Cibao	**Pronominal**	N = 189 39.2%	N = 293 60.8%	N = 482 100.0%
	Lexical DP	N = 22 36.1%	N = 39 63.9%	N = 61 100.0%
	Total per position	N = 211 38.9%	N = 332 61.1%	N = 543 100.0%
Santo Domingo	**Pronominal**	N = 267 55.6%	N = 213 44.4%	N = 480 100.0%
	Lexical DP	N = 44 73.3%	N = 16 26.7%	N = 60 100.0%
	Total per position	N = 311 57.6%	N = 229 42.4%	N = 540 100.0%

El Cibao: Chi-square: *.226* *p=<.635>*
Santo Domingo: Chi-square: *6.848* *p=<.009>*

As shown in the gray cells of table 4.8. (similar to table 4.5. above), in the A-test, the group from El Cibao has higher percentages of postverbal subjects than the group from Santo Domingo. According to the postverbal selection of subjects and the type of subjects, El Cibao group shows a slightly higher percentage of postverbal lexical subjects

(63.9%) than postverbal pronominal ones (60.8%), i.e. they show a similar tendency to accept postverbal subjects, irrespective of the pronominal or lexical nature of the subject. The participants from El Cibao show that the [+ strong] verbal values in Agr are available to them, irrespective of the nature of the subjects (pronominal or lexical). The Santo Domingo group presents a different pattern, i.e., out of all the pronominal subjects in the A-test, 44.4% of them are postverbal; and out of all the lexical DP subjects, 26.7% are postverbal. Consequently, the [+ strong] verbal values in Agr are not so clearly observed among the Santo Domingo participants, especially when they have lexical subjects. My hypothesis is confirmed for the El Cibao participants, i.e., they show a similar distribution in the acceptance of all postverbal subjects (pronominal and lexical). But, the Santo Domingo group does not show this distribution. The [+ strong] value in T seems to be fixed in the case of the El Cibao participants (for all subject types), whereas the Santo Domingo group does not show this pattern. Nonetheless, the Santo Domingo group shows a higher statistical significance (chi square is 6.848, and *p* value is of .009) than the El Cibao group (chi-square is .226 and *p* value is of .635).

Table 4.9. presents the selection of null, preverbal, and postverbal subjects by the two monolingual groups in the B-test. That is, the cross-tabulation of speakers from El Cibao and Santo Domingo with regard to postverbal pronominal and lexical subjects in the B-test is presented. The total amount of subjects (N = 415) considered is the sum of all the postverbal subjects selected in the B-test by the two monolingual participants, i.e., N = 244, and N = 171.

Table 4.9.: Cross-tabulation of speakers from El Cibao and Santo Domingo with regard to postverbal pronominal and lexical subjects in interrogatives – B-test (N = 1123)

B-test		**Null**	**Preverbal**	**Postverbal**	**Total per subject type**
El Cibao	**Null**	N = 149 100.0%	N = 0 0.0%	N = 0 0.0%	N = 149 100.0%
	Pronominal	N = 0 0.0%	N = 144 39.5%	N = 221 60.5%	N = 365 100.0%
	Lexical DP	N = 0 0.0%	N = 24 51.1%	N = 23 48.9%	N = 47 100.0%
	Total per position	N = 149 26.6%	N = 168 29.9%	N = 244 43.5%	N = 561 100.0%
Santo Domingo	**Null**	N = 174 100.0%	N = 0 0.0%	N = 0 0.0%	N = 174 100.0%
	Pronominal	N = 0 0.0%	N = 191 57.0%	N = 144 43.0%	N = 335 100.0%
	Lexical DP	N = 0 0.0%	N = 26 49.1%	N = 27 50.9%	N = 53 100.0%
	Total per position	N = 174 31.0%	N = 217 38.6%	N = 171 30.4%	N = 562 100.0%

El Cibao: Chi-square: *564.166* *p=<.000>*
Santo Domingo: Chi-square: *563.703* *p=<.000>*

As observed in the dark cells of table 4.9., the participants from El Cibao selected more postverbal subjects in the B-test than the Santo Domingo group. This was also the case in the other GJ task testing interrogative sentences, i.e., the A-test (see table 4.8.). In the B-test, and in regard to the pronominal and lexical nature of the subject, El Cibao group shows that, out of all the pronominal subjects, 60.5% were preferred in postverbal position. This percentage is lower in the case of the Santo Domingo participants. The Santo Domingo participants only selected 43.0% of the pronominal subjects in a postverbal position. If the percentages of postverbal pronominal subjects are compared with the ones obtained in the A-test by the El Cibao and Santo Domingo groups (60.8% and 44.4%, respectively), the two monolingual groups maintain very similar percentages in both tasks. The postverbal selection of pronominal subjects in interrogative sentences

is similar, irrespective of the task studied (A-test or B-test). With respect to the lexical nature of the subjects in the B-test, out of all the lexical subjects produced by the group from El Cibao, 48.9% of them were postverbal, whereas the Santo Domingo group selected 50.9% lexical subjects in a postverbal position. These two percentages show that the two monolingual groups have a similar preference for postverbal lexical subjects in the B-test (approximately 50% of the lexical subjects are postverbal). In the B-test, the statistical significance between the variables studied in table 4.9 is higher than in the A-test. In the B-test the results from the two monolingual groups show that *p* value is of .000.

Summing up the results from the two tasks testing interrogative sentences (A-test and B-test), the group from El Cibao shows a higher percentage of postverbal subjects (A-test: 61.1%, and B-test: 43.5%) than the Santo Domingo group (A-test: 42.4%, and B-test: 30.4%). According to the nature of the subjects, the two monolingual groups show consistency in the percentage of postverbal pronominal subjects in the A-test and B-test. Specifically, the percentage of postverbal pronominal subjects selected by each monolingual group is maintained in the two GJ tasks testing interrogative sentences. In these two GJ tasks (A-test and B-test), the [+ strong] verbal value in T is present in both groups, irrespectively of the subject type (pronominal and lexical). Therefore, my hypothesis is confirmed.

Finally, the postverbal selection of subjects in declarative sentences is observed in the C-test. Table 4.10. presents the cross-tabulation of speakers from El Cibao and Santo Domingo with regard to postverbal pronominal and lexical subjects in this GJ task (C-

test). The total number of subjects analyzed in table 4.10. (N = 272) represents all the postverbal subjects selected by the two monolingual groups of participants in the C-test.

Table 4.10.: Cross-tabulation of speakers from El Cibao and Santo Domingo with regard to post-verbal pronominal and lexical subjects in declaratives – C-test (N = 1243)

C-test		**Null**	**Preverbal**	**Postverbal**	**Total**
El Cibao	**Null**	N = 205 100.0%	N = 0 0.0%	N = 0 0.0%	N = 205 100.0%
	Pronominal	N = 0 0.0%	N = 199 55.4%	N = 160 44.6%	N = 359 100.0%
	Lexical DP	N = 0 0.0%	N = 36 61.0%	N = 23 39.0%	N = 59 100.0%
	Total per position	N = 205 32.9%	N = 235 37.7%	N = 183 29.4%	N = 623 100.0%
Santo Domingo	**Null**	N = 212 100.0%	N = 0 0.0%	N = 0 0.0%	N = 212 100.0%
	Pronominal	N = 0 0.0%	N = 262 76.4%	N = 81 23.6%	N = 343 100.0%
	Lexical DP	N = 0 0.0%	N = 57 87.7%	N = 8 12.3%	N = 65 100.0%
	Total per position	N = 212 34.2%	N = 319 51.5%	N = 89 14.4%	N = 620 100.0%

El Cibao: Chi-square: *623.957* *p=<.000>*
Santo Domingo: Chi-square: *626.225* *p=<.000>*

In the C-test, again the group from El Cibao selected a higher percentage of postverbal subjects (29.4%) than the group from Santo Domingo (14.4%), as observed in the total percentage of subjects according to their position. According to the pronominal and lexical nature of the subjects and the origin of the participants, it can be observed that in the case of El Cibao, out of the total amount of pronominal subjects 44.6% are postverbal, whereas the Santo Domingo participants selected 23.6% postverbal pronominal subjects. On the other hand, according to the lexical nature of the subject, out of the total amount of possible lexical subjects in each group, the speakers from El Cibao selected 39.0% postverbally, whereas the Santo Domingo group has 12.3% postverbal lexical subjects. In general, in the C-test (i.e., in declarative sentences), the [+ strong]

verbal value in T is present in the two monolingual groups, especially among the El Cibao participants. This finding confirms my hypothesis (in declarative sentences), in which I suggested that if the monolingual DS participants have [+ strong] verbal values in T, then I should find postverbal subjects. Note that in the C-test, the two monolingual groups show a statistically significant relationship between the variables (*p* value is of .000 in both cases).

After observing tables 4.8. – 4.10., I conclude that, both monolingual groups have available to them the [+ strong] verbal values of T. The group from El Cibao shows higher percentages of postverbal subjects than the Santo Domingo group, in both declarative and interrogative sentences (A-test, B-test, and C-test). In general, this preference is maintained irrespective of the pronominal or lexical nature of the subject. Pronominal subjects are statistically significant (*p* value is of .000) in the three GJ tasks, when the data from the two monolingual groups are cross-tabulated, and lexical subjects are statistically significant only in the A-test and C-test (*p* value is of .000), but not in the B-test (*p* value is of .841). This general tendency confirms my sixth hypothesis, where I hypothesized that if the two monolingual groups of DS speakers only have available the [+ strong] verbal features in T, then they should select postverbal pronominal and lexical subjects.

The preverbal or postverbal position of subjects has also been related to the function of wh-phrase before its extraction (wh-arguments or wh-adjuncts). My seventh hypothesis proposed that if the monolingual DS speakers are sensitive to the constraints of the subject position according to the function of the wh-phrase, they will show a higher percentage of postverbal subjects with wh-argumental interrogatives than with wh-

adjuncts. But, if they are not sensitive to these constraints, I should find that the percentage of preverbal subjects in wh-argument interrogatives will also be high. Tables 4.11. – 4.14 test this aspect.

Table 4.11. cross-tabulates the results from speakers from El Cibao and Santo Domingo with regard to preverbal subjects with wh-argument and wh-adjunct phrases in the A-test. The total number of samples considered in table 4.11. (N = 348) represents the total amount of preverbal subjects selected in interrogative sentences with a wh-phrase (information interrogative sentences), in the A-test.

Table 4.11.: Cross-tabulation of speakers from El Cibao and Santo Domingo with regard to preverbal subjects with wh-argument and wh-adjunct phrases –A-test (N = 722)

A-test		**Wh-adjunct**	**Wh-argument**	**Total per position**
El Cibao	**Preverbal**	N = 66 36.5%	N = 78 43.1%	N = 144 39.8%
	Postverbal	N = 115 63.5%	N = 103 56.9%	N = 218 60.2%
	Total	N = 181 100.0%	N = 181 100.0%	N = 362 100.0%
Santo Domingo	**Preverbal**	N = 106 58.9%	N = 98 54.4%	N = 204 56.7%
	Postverbal	N = 74 41.1%	N = 82 45.6%	N = 156 43.3%
	Total	N = 180 100.0%	N = 180 100.0%	N = 360 100.0%

El Cibao: Chi-square: *1.661* *p=<.198>*
Santo Domingo: Chi-square: *.724* *p=<.395>*

The gray cells in table 4.11. present the preverbal position of subjects in wh-adjunct and wh-argumental interrogative sentences. As observed in the last column in table 4.11. (where the total amount of overt subjects per position is presented), the speakers from Santo Domingo have a higher percentage of preverbal subjects with wh-adjunct and wh-argument interrogative sentences (56.7%) than the El Cibao group (39.8%). With regard

to the preverbal position of subjects according to the wh-phrase, the El Cibao group shows a higher percentage of preverbal subjects with wh-argumental sentences (43.1%) than with wh-adjunct ones (36.5%). Unlike the El Cibao group, the Santo Domingo group selected a higher percentage of preverbal subjects with wh-adjunct sentences (58.9%) than with wh-argumental interrogative ones (54.4%). Therefore, a higher percentage of preverbal subjects with wh-adjunct phrases than with wh-argumental ones can only be found in the Santo Domingo group. Moreover, out of the total amount of wh-adjunct sentences produced by each monolingual group, the group from El Cibao selected 36.5% subjects in preverbal position, whereas the Santo Domingo group produced 58.9% preverbally. On the other hand, out of the total amount of sentences with wh-argumental sentences, the participants from El Cibao preferred preverbal subjects 43.1% of the times, whereas the Santo Domingo group selected 54.4% of them. In the A-test, none of the two monolingual groups seems to be very sensitive to the constraints imposed by the nature of the wh-words, since the percentage of preverbal subjects is high by both monolingual groups. The similar percentage of preverbal subjects found in the Santo Domingo group in both wh-interrogative sentences (wh-adjunct and wh-argument) indicate that the monolingual group from Santo Domingo seems to be even less sensitive to the wh-constraints than the El Cibao group. But, as indicated in the chi-square and *p* values, in the A-test there is no statistically significant relationship between the variables examined in table 4.11. in any of the two monolingual groups. The lack of statistical significance indicates that other variables may be influencing the selection of subjects. For instance, it can be suggested that the design of the task may be affecting the results.[172]

[172] In the A-test, null subjects were not a possible selection.

The following table (4.12.) presents the cross-tabulation of speakers from El Cibao and Santo Domingo with regard to postverbal subjects with wh-argument and wh-adjunct phrases in the A-test. The total number of items analyzed in the gray cells in table 4.12. (N = 374) refers to the total amount of postverbal subjects in wh- interrogative sentences selected by the two monolingual groups in only one of the GJ tasks (the A-test). This total number (N = 374) is the sum of the total amount of postverbal subjects selected by each group in the A-test, i.e. N = 218 and N = 156. Since table 4.12. focuses on the results of postverbal subjects obtained in one test only (A-test), a low number of items is anticipated.

Table 4.12.: Cross-tabulation of speakers from El Cibao and Santo Domingo with regard to postverbal subjects with wh-argument and wh-adjunct phrases –A-test (N = 722)

A-test		**Wh-adjunct**	**Wh-argument**	**Total per position**
El Cibao	**Preverbal**	N = 66 36.5%	N = 78 43.1%	N = 144 39.8%
	Postverbal	N = 115 63.5%	N = 103 56.9%	N = 218 60.2%
	Total	N = 181 100.0%	N = 181 100.0%	N = 362 100.0%
Santo Domingo	**Preverbal**	N = 106 58.9%	N = 98 54.4%	N = 204 56.7%
	Postverbal	N = 74 41.1%	N = 82 45.6%	N = 156 43.3%
	Total	N = 180 100.0%	N = 180 100.0%	N = 360 100.0%

El Cibao: Chi-square: *1.661* *p=<.198>*
Santo Domingo: Chi-square: *.724* *p=<.395>*

As illustrated in the last column of gray cells in table 4.12. (similar to table 4.11.), the percentages of postverbal subjects in wh-interrogative sentences are higher among the participants from El Cibao (60.2%) than in the Santo Domingo participants (43.3%). Out of the total amount of subjects that appear in wh-adjunct sentences, the participants from

El Cibao selected 63.5% postverbally, whereas in the same kind of sentences the Santo Domingo group preferred 41.1% postverbally. On the other hand, in wh-argumental sentences, out of the total amount of subjects selected by El Cibao group 56.9% of them were postverbal; whereas, the Santo Domingo participants preferred 45.6% postverbal subjects in wh-argumental interrogative sentences. In regard to the postverbal selection of subjects in the A-test, the group from El Cibao has the highest percentage of postverbal subjects with wh-adjunct sentences (63.5%), and the Santo Domingo group presents the highest percentage of postverbal subjects in wh-argumental interrogative sentences (45.6%). In the A-test, the most remarkable difference can be found in the percentage of postverbal subjects by the group from El Cibao in wh-adjunct sentences (63.5%). But, as observed in the chi-square and *p* values under table 4.12, there is no statistically significant relationship between the variables (*p* value is higher than .05, and .10). The lack of statistical significance indicates that my hypothesis cannot be confirmed or refuted with the data in table 4.12. Other variables may be intervening in monolingual selection of the subject position in wh-interrogative sentences. Some of the variables that may be intervening are the pragmatic and discursive value of the subjects, the pronominal or lexical nature of the subjects, or the design of the task (A-test).

In the B-test, I also explored the preverbal or postverbal position of subjects according to the function of wh-phrase before extraction. The gray cells in table 4.13. illustrate a cross-tabulation of speakers from El Cibao and Santo Domingo with regard to preverbal subjects with wh-argument and wh-adjunct phrases in the B-test. The total number of items analyzed in the gray cells (N = 248) refers only to sum of all the

preverbal subjects in informative interrogatives (with wh-phrases). But the number of items cross-tabulated is higher (N = 762).

Table 4.13.: Cross-tabulation of speakers from El Cibao and Santo Domingo with regard to preverbal subjects with wh-argument and wh-adjunct phrases –B-test (N = 762)

B-test		**Wh-adjunct**	**Wh-argument**
El Cibao	**Null**	N = 52 28.7%	N = 46 23.0%
	Preverbal	N = 71 39.2%	N = 43 21.5%
	Postverbal	N = 58 32.1%	N = 111 55.5%
	Total	N = 181 100.0%	N = 200 100.0%
Santo Domingo	**Null**	N = 57 31.5%	N = 60 30.0%
	Preverbal	N = 83 45.9%	N = 51 25.5%
	Postverbal	N = 41 22.6%	N = 89 44.5%
	Total	N = 181 100.0%	N = 200 100.0%

El Cibao: Chi-square: *22.975* *p=<.000>*
Santo Domingo: Chi-square: *24.555* *p=<.000>*

In this GJ task (B-test) there are three possible answers to choose from (preverbal, postverbal, and null subjects). Table 4.13. above reflects the percentage of overt and null subjects selected in different wh- interrogative sentences. As illustrated in table 4.13., the Santo Domingo group has a higher percentage of preverbal subjects in both wh-adjunct and wh-argumental interrogative sentences (45.9% and 25.5%, respectively) than the group from El Cibao (39.2% and 21.5%, respectively). Comparing the selection of preverbal subjects in wh-argumental and wh-adjunct sentences by each monolingual group, the participants from El Cibao show a higher percentage of preverbal subjects with wh-adjunct interrogative sentences (39.2%) than with wh-argumental ones (21.5%). In this task (B-test), they follow a different pattern from the A-test (wh-adjunct: 36.5% and

wh-argument: 43.1%). In the B-test, the participants from Santo Domingo also show a higher percentage of preverbal subjects with wh-adjunct sentences (45.9%) than with wh-argumental ones (25.5%). The Santo Domingo group exhibited the same pattern of preference in the A-test (wh-adjunct: 58.9% and wh-argument: 54.4%). According to the selection of preverbal subjects in each wh-interrogative sentence, in the B-test the two monolingual groups of speakers show a higher percentage of preverbal subjects with wh-adjunct sentences than with wh-argumental ones. This pattern suggests that, in the B-test, both groups seem to be sensitive to the wh-constraints, which confirms my hypothesis. According to the probability value shown under table 4.13., these variables are statistically significant (*p* value is of .000).

In order to complete the general view of the effect that the function of the wh-phrase has over the position of the subject in the B-test, table 4.14. (similar to table 4.13.) presents the cross-tabulation of speakers from El Cibao and Santo Domingo with regard to postverbal subjects with wh-argument and wh-adjunct phrases. The gray cells in the following table only reflect the monolingual participants' selection of postverbal subjects in the B-test. Therefore, some low numbers may be found in table 4.14., but they are still statistically significant.

Table 4.14.: Cross-tabulation of speakers from El Cibao and Santo Domingo with regard to postverbal subjects with wh-argument and wh-adjunct phrases –B-test (N = 762)

B-test		**Wh-adjunct**	**Wh-argument**
El Cibao	**Null**	N = 52 28.7%	N = 46 23.0%
	Preverbal	N = 71 39.2%	N = 43 21.5%
	Postverbal	N = 58 32.1%	N = 111 55.5%
	Total	N = 181 100.0%	N = 200 100.0%
Santo Domingo	**Null**	N = 57 31.5%	N = 60 30.0%
	Preverbal	N = 83 45.9%	N = 51 25.5%
	Postverbal	N = 41 22.6%	N = 89 44.5%
	Total	N = 181 100.0%	N = 200 100.0%

El Cibao: Chi-square: *22.975* *p=<.000>*
Santo Domingo: Chi-square: *24.555* *p=<.000>*

In general, as observed in the gray cells in table 4.14., the two monolingual groups of speakers show a higher percentage of postverbal subjects in wh-argumental sentences than in wh-adjunct ones. This preference in the B-test confirms my hypothesis. Specifically, out of the total amount of subjects per type of wh-sentence, the group from El Cibao accepted 32.1% postverbal subjects in wh-adjunct sentences, and 55.5% postverbal subjects in wh-argumental sentences. On the other hand, the Santo Domingo group shows that 22.6% of the total subjects in wh-adjunct sentences are postverbal ones, and 44.5% of the subjects in wh-argumental interrogative sentences are also postverbal subjects. My hypothesis is confirmed in the B-test, but not in the A-test. In the B-test, the two monolingual groups show some constraints on the type of wh-interrogative sentence and the subject's position (higher percentage of postverbal subjects with wh-argumental

than with wh-adjunct interrogative sentences). The two monolingual groups show that the variables in table 4.14. are statistically correlated (*p* value is of .000).

Summing up the data obtained from the A-test and B-test (the two GJ tasks testing subjects in interrogative sentences), different results are observed in these two tasks, but only the B-test shows statistically significant results (*p* value is of.000). Therefore, my hypothesis seven is confirmed only by the results of the B-test. This hypothesis suggested that if the monolingual DS speakers are sensitive to the constraints of the subject position according to the function of the wh-phrase, they will produce a higher percentage of postverbal subjects with wh-argumental interrogatives than with wh-adjunct. But, if they are not sensitive to these constraints, the percentage of preverbal subjects in wh-argument interrogatives will also be high. Specifically, one can observe that the Santo Domingo group is sensitive to wh-constraints, since they have a higher percentage of postverbal subjects with wh-argumental interrogatives than with wh-adjuncts in the A-test and B-test. But, the group from El Cibao shows a higher percentage of postverbal subjects with wh-argumental interrogatives than with wh-adjuncts only in the B-test, but not in the A-test. The El Cibao group did not show sensitivity to the function of the wh-phrase in the A-test (where there were no null subjects), resulting in a higher percentage of preverbal subjects in wh-argumental sentences than in wh-adjunct ones. Nonetheless, it must be acknowledged that the *p* values observed under tables 4.11. – 4.14. illustrate that, the variables examined in these tables are statistically significant only in the B-test, and not in the A-test. In the latter case, not having null subjects in the A-test may be affecting their selection of preverbal and postverbal subjects. Therefore, not having null subjects in the A-test might be the factor that may have caused its lack of statistical significance.

4.2.3. Expletives: Results from the GJs (B-test and C-test) by the two monolingual groups

This section presents the results obtained from the B-test and C-test in regard to the acceptance of overt expletives in interrogative and declarative sentences, addressing the eighth hypothesis, as presented in chapter 1. I proposed that if DS monolingual speakers are adopting the [+ strong] nominal features in T, even with expletive subjects, then overt expletives should appear in interrogative and in declarative sentences. Table 4.15. shows a cross-tabulation of speakers from El Cibao and Santo Domingo with regard to overt expletives in interrogative and declarative sentences (B-test and C-test).

The total amount of overt expletives (N = 47) selected by the two monolingual groups in these two tasks is very low. Therefore, the results obtained in these two tasks in regard to the selection of expletives will only provide a tendency, but no generalizations will be provided. In the B-test and C-test, some of the participants chose more than one answer. Specifically, in the B-test, one participant from each monolingual group selected more than one answer. In the C-test, none of the Santo Domingo speakers chose more than one answer, but one of the participants from El Cibao selected more than one answer.

Table 4.15.: Cross-tabulation of speakers from El Cibao and Santo Domingo with regard to overt expletives in interrogatives and declaratives –B-test and C-test (N = 204)

Expletives		**El Cibao**	**Santo Domingo**	**Total**
B-test (interrogatives)	**Null**	N = 37 60.7%	N = 51 82.3%	N = 88 71.5%
	Overt	N = 24 39.3%	N = 11 17.7%	N = 35 28.5%
	Total	N = 61 100.0%	N = 62 100.0%	N = 123 100.0%
C-test (declaratives)	**Null**	N = 32 78.0%	N = 37 92.5%	N = 69 85.2%
	Overt	N = 9 22.0%	N = 3 7.5%	N = 12 14.8%
	Total	N = 41 100.0%	N = 40 100.0%	N = 81 100.0%

B-test: Chi-square: *7.048* *p=<.008>*
C-test: Chi-square: *3.350* *p=<.067>*

As illustrated in the gray cells in table 4.15., the group from El Cibao shows a higher percentage of overt expletives in the B-test and C-test than the Santo Domingo group. In interrogative sentences (in the B-test), the participants from El Cibao selected 39.3% overt expletives, whereas the Santo Domingo group selected 17.7% overt expletives. In the C-test (declarative sentences), the percentage of overt expletives is also higher among the participants from El Cibao (22.0%) than among the Santo Domingo ones (7.5%). Summing up, the group from El Cibao opted for more overt expletives in both declarative and interrogative sentences than the Santo Domingo group; and in regard to the task, the two monolingual groups have a higher percentage of overt expletive subjects in interrogative sentences than in declarative ones. These results are in agreement with what I proposed in my eighth hypothesis. Specifically, the two monolingual groups of speakers have overt expletives in both interrogative and in declarative sentences, which suggests that they may be showing a tendency to adopt the [+ strong] nominal features in T. But, this tendency is found mainly among El Cibao speakers, and more in interrogative

sentences. Therefore, if a change in the acceptance of expletives is in progress, it affects differently the two groups of monolingual participants (El Cibao and Santo Domingo), and the type of sentence (interrogative or declarative) where the subject appears. According to the statistical significance of these variables, it must be noted that the B-test (interrogative sentences) is more statistically significant (*p* value is of .008) than the C-test (*p* value is of .067). In the C-test, some other factors, such as the educational level or the age of the participants, may be affecting the selection of expletives (see tables 4.20. and 4.25.).

4.2.4. *That*-trace filter: Results from the GJs (A-test and B-test) by the two monolingual groups

Finally, the violation of the *that*-trace filter is also analyzed in the A-test and B-test, i.e., in the two GJ tasks analyzing interrogative sentences. In both tasks, the participants were provided with a series of interrogative sentences with null complementizers, and they were asked to accept them or reject them.

In order to address this last *pro*-drop property (*that*-trace filter), I hypothesized that if DS monolingual speakers do not violate the *that*-trace filter (as in the case of English-like languages), then I should find that they accept a high percentage of constructions with a null complementizer. Table 4.16. presents a cross-tabulation of speakers from El Cibao and Santo Domingo with regard to null complementizers in *that*-trace structures in the two GJ tasks testing interrogative sentences (A-test and B-test).

Table 4.16.: Cross-tabulation of speakers from El Cibao and Santo Domingo with regard to null complementizers in *that*-trace structures – A-test and B-test (N = 320).

Null complementizers		**El Cibao**	**Santo Domingo**	**Total**
A-test (interrogatives)	**Accept Null compl.**	N = 65 81.3%	N = 45 56.3%	N = 110 68.8%
	NOT accept Null compl.	N = 15 18.8%	N = 35 43.8%	N = 50 31.3%
	Total	N = 80 100.0%	N = 80 100.0%	N = 160 100.0%
B-test (interrogatives)	**Accept Null compl.**	N = 64 80.0%	N = 59 73.8%	N = 123 76.9%
	NOT accept Null compl.	N = 16 20.0%	N = 21 26.3%	N = 37 23.1%
	Total	N = 80 100.0%	N = 80 100.0%	N = 160 100.0%

A-test: Chi-square: *11.636* *p=<.001>*
B-test: Chi-square: *.879* *p=<.348>*

As observed in the gray cells in table 4.16., the group from El Cibao accepts more interrogative sentences with null complementizers than the Santo Domingo group in the A-test and B-test. Out of all the sentences testing the acceptance of complementizers in interrogative sentences in the A-test, the participants from El Cibao accepts the null complementizers 81.3%, whereas the Santo Domingo group accepts null complementizers 56.3% of the times. In the B-test, the difference between both monolingual groups is not as marked. The difference between the A-test and the B-test may be due to the nature of the task. As observed in table 4.16., the percentage of acceptance of null complementizers is very similar between the two monolingual groups in the B-test, and also similar to El Cibao's selection in the A-test. El Cibao group maintains a similar percentage of acceptance of null complementizers in the A-test (where the only choices are preverbal and postverbal subjects) and in the B-test (where the choices are null, preverbal, and postverbal subjects). But, this is not the case with Santo Domingo participants. Specifically, in the B-test, out of all the interrogative

sentences with null complementizers presented to the monolingual speakers, the participants from El Cibao accepted 80.0% of them, and the Santo Domingo group chose 73.8%. The cross-tabulation of the variables in table 4.16. shows that the data from the A-test are the only statistically significant ones (chi-square is 11.636 and *p* value is of .001), whereas the results in the B-test are less statistically significant (chi-square is .879 and *p* is .348). Therefore, these results confirm hypothesis nine (especially in the A-test), since both groups show a high percentage of acceptance of constructions with a null complementizer. In hypothesis nine I suggested that if DS monolingual speakers do not violate the *that*-trace filter, then a high percentage of constructions with a null complementizer should be accepted.

Summing up the results presented in tables 4.15. and 4.16., the participants from El Cibao accept more overt expletives, and more interrogative sentences with a null complementizer than the participants from Santo Domingo.

4.2.5. Social factors: Results from the GJs (A-test, B-test, and C-test)

The four *pro*-drop properties are also analyzed looking at the effect that some social factors may have over them. Specifically, different social variables are analyzed in each group of participants. In El Cibao group, I observe the effect that the participants' age can have in the *pro*-drop properties. And in the group from Santo Domingo, I examine the effect that the level of education may have over the *pro*-drop properties. In the following subsections (4.2.5.1 and 4.2.5.2.), I present the results from the three GJ tasks (A-test, B-test, and C-test) according to the effect that these social factors may have over the *pro*-drop properties.

4.2.5.1. Social factors – Age in El Cibao: Results from the GJs (A-test, B-test, and C-test)

In this section of the chapter, I address the hypotheses that focus on how the age factor among El Cibao participants affects *pro*-drop properties. Since El Cibao has been considered one of the areas in the Dominican Republic leading a possible language change, observing El Cibao participants from different generations may clarify if this change is taking place. The tenth hypothesis is related to this aspect, suggesting that if the monolingual speakers from El Cibao are undergoing a process of parametric change, then the older participants will show more null, postverbal, and expletive subjects than the younger ones, as well as higher percentage of violations of the *that*-trace filter. Tables 4.17. – 4.21. present results that will confirm or refute the tenth hypothesis.

The first part of the hypothesis is addressed in table 4.17. This table presents a cross-tabulation of speakers from El Cibao with regard to null subjects in the B-test and C-test, i.e., in interrogative and declarative sentences respectively, according to their age. No reports of the A-test are presented in table 4.17. since that test did not contain items with null subjects.

Table 4.17.: Cross-tabulation of speakers from El Cibao with regard to null subjects in declaratives and interrogatives according to age – B-test and C-test (N = 1184)

El Cibao		**B-test**	**C-test**	**Total null subjects per age range**
Age 18-29	**Null**	N = 33 29.5%	N = 31 24.4%	N = 64 26.8%
	Overt	N = 79 70.5%	N = 96 75.6%	N = 175 73.2%
	Total age 18-29 per task	N = 112 100.0%	N = 127 100.0%	N = 239 100.0%
Age 30-39	**Null**	N = 55 32.5%	N = 80 43.0%	N = 135 38.0%
	Overt	N = 114 67.5%	N = 106 57.0%	N = 220 62.0%
	Total age 30-39 per task	N = 169 100.0%	N = 186 100.0%	N = 355 100.0%
Age 40-50	**Null**	N = 20 23.8%	N = 35 37.6%	N = 55 31.1%
	Overt	N = 64 76.2%	N = 58 62.4%	N = 122 68.9%
	Total age 40-50 per task	N = 84 100.0%	N = 93 100.0%	N = 177 100.0%
Age over 50	**Null**	N = 41 20.9%	N = 59 27.2%	N = 100 24.2%
	Overt	N = 155 79.1%	N = 158 72.8%	N = 313 75.8%
	Total age over 50 per task	N = 196 100.0%	N = 217 100.0%	N = 413 100.0%

Age 18-29: Chi-square: *564.166* *p=<.000>*
Age 30-39: Chi-square: *623.957* *p=<.000>*
Age 40-50: Chi-square: *563.703* *p=<.000>*
Over 50: Chi-square: *626.225* *p=<.000>*

The gray cells in table 4.17. represent the total amount of null subjects accepted by the members of each age-range group (of El Cibao) in each GJ task (B-test and C-test). In order to have a better understanding of the diachronical development in the selection of null subjects, the following figure exemplifies the selection of null subjects by the participants from El Cibao in interrogative (B-test) and declarative (C-test) sentences.

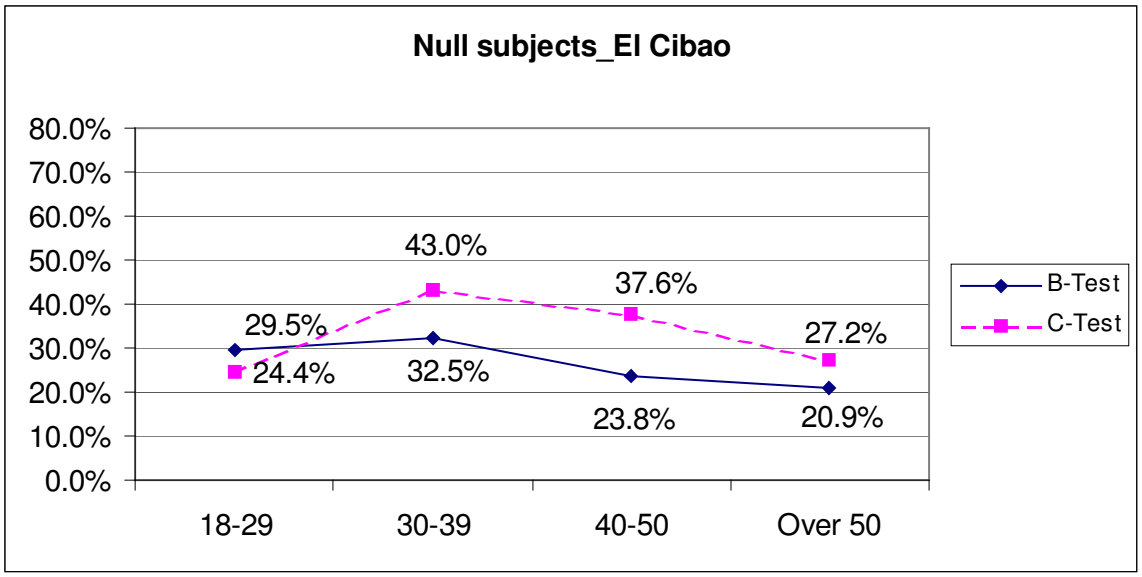

Figure 4.1.: Null subjects in interrogative (B-test) and declarative sentences (C-test) by the participants from El Cibao, according to their age-range.

Figure 4.1. illustrates that the preference of null subjects is higher in the C-test (declarative sentences) than in the B-test (interrogative sentences) among the three older groups of participants, but this is not the case of the youngest group (age 18-29). In both GJ tasks, the three older groups of participants show a tendency to increase the percentages of null subjects in interrogative and declarative sentences (B-test and C-test, respectively), as the age of the participants decreases. For instance, in interrogative sentences (B-test), the oldest group (age over 50) selected 20.9% null subjects, followed by the group between 40 and 50 years old (23.8%), and finally, the participants between 30 and 39 selected 32.5% null subjects. Similarly, in the C-test, the oldest group selected 27.2% null subjects, followed by the participants between 40 and 50 (37.6%), and finally the participants between 30 and 39 selected the highest percentages of null subjects. On the other hand, the youngest group of participants (age between 18-29) does not show the tendency described above. The youngest participants selected 29.5% null subjects in the B-test, and 24.4% in the C-test.

These results show that there is a tendency to decrease the selection of null subjects as the age increases, in interrogative sentences (B-test). But in declarative sentences (C-test), the youngest group does not follow this tendency. Note that the variables in table 4.17. are statistically significant only for the C-test (chi-square is 16.909, and *p* value is of .001); and even though the results in the B-test are slightly above the level of significance set for this study (*p* value is of .068), they still merit some attention. The lower statistical significance in the B-test suggests that other variables may be affecting the selection of subjects according to the age group of the El Cibao participants. Some of the variables that may be affecting are the nature of the subject, the nature of the interrogative sentence, or the task used to elicit data. These results illustrate that the hypothesized parametric change may not be taking place and, consequently, the first part of my hypothesis is not confirmed. I suggested that if DS speakers from El Cibao are undergoing a process of parametric change, then the older participants will show more null subjects than the younger groups. But as illustrated in table 4.17. and figure 4.1. above, the oldest participants (over 50 years old) tend to select less null subjects than the other (younger) age groups in interrogative and in declarative sentences.

The second part of the hypothesis is addressed in table 4.18. below. In table 4.18. I present the cross-tabulation of speakers from El Cibao with regard to postverbal subjects in the A-test and B-test (interrogative sentences) according to the age of the participants from El Cibao, and in table 4.19. I present the percentage of subjects in the C-test (declarative sentences). It should be noted that the next two tables illustrate the subject selection of only one monolingual group (El Cibao) in different tasks, according

to the participants' age range. Therefore, the numbers in these two tables may be low, but they are still statistically significant.

Table 4.18.: Cross-tabulation of speakers from El Cibao with regard to postverbal subjects in interrogatives according to age – A-test and B-test (N = 1104)

El Cibao		**A-Test**	**B-Test**
Age 18-29	**Preverbal**	N = 56 50.5%	N = 51 45.5%
	Postverbal	N = 55 49.5%	N = 28 25.0%
	Null	-	N = 33 29.5%
	Total age 18-29 per task	N = 111 100.0%	N = 112 100.0%
Age 30-39	**Preverbal**	N = 42 25.9%	N = 30 17.8%
	Postverbal	N = 120 74.1%	N = 84 49.7%
	Null	-	N = 55 32.5%
	Total age 30-39 per task	N = 162 100.0%	N = 169 100.0%
Age 40-50	**Preverbal**	N = 30 37.0%	N = 26 31.0%
	Postverbal	N = 51 63.0%	N = 38 45.2%
	Null	-	N = 20 23.8%
	Total age 40-50 per task	N = 81 100.0%	N = 84 100.0%
Age over 50	**Preverbal**	N = 83 43.9%	N = 61 31.1%
	Postverbal	N = 106 56.1%	N = 94 48.0%
	Null	-	N = 41 20.9%
	Total age over 50 per task	N = 189 100.0%	N = 196 100.0%

Age 18-29: Chi-square: *42.013* *p=<.000>*
Age 30-39: Chi-square: *63.233* *p=<.000>*
Age 40-50: Chi-square: *22.137* *p=<.000>*
Over 50: Chi-square: *44.969* *p=<.000>*

Out of the total number of postverbal subjects accepted by the El Cibao participants in the A-test and B-test, per age range, the A-test presents a higher percentage of postverbal subjects than the B-test. This could be attributed to the fact that, in the B-test, the null subject option attracted some of the answers assigned to postverbal subjects in the A-test (see chapter 3 for more details on the different tasks). In order to observe the diachronic development in the selection of postverbal subjects according to the different age-ranges among the participants from El Cibao, figure 4.2. presents such a distribution. Figure 4.2. represents the postverbal distribution of subjects as presented in the gray cells in table 4.18.

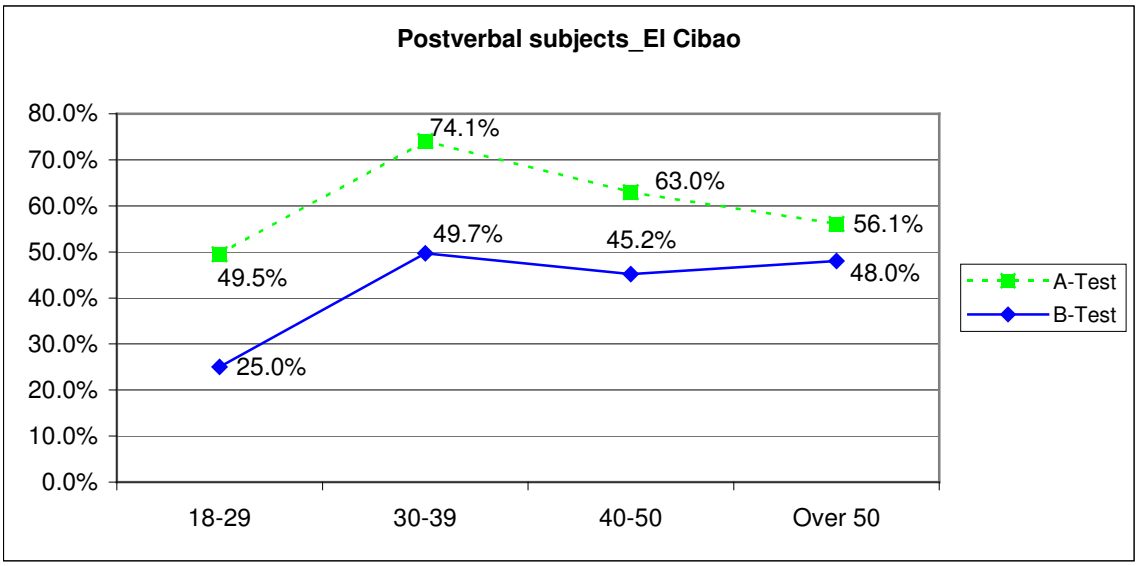

Figure 4.2.: Postverbal subjects in interrogative sentences (A-test and B-test) by the participants from El Cibao, according to their age-range.

As observed in table 4.18. and figure 4.2., the selection of postverbal subjects in the two GJ tasks testing interrogative sentences (A-test and B-test) decreases among the youngest participants (age 18 - 29). In both tasks (A-test and B-test), the youngest group selected the lowest percentage of postverbal subjects, and the participants between 30 and 39 selected the highest percentages of postverbal subjects. Figure 4.2. shows that the

three older groups of participants present a tendency to increase the percentage of postverbal subjects in the A-test, as the age of the participants also increases. Therefore, in the A-test, it can be observed that the oldest participants (over 50) selected 56.1% postverbal subjects, followed by the participants between 40 and 50 (63.0%), and the highest percentage of postverbal subjects was selected by the participants between 30 and 39 (74.1%).

In the B-test, the three older groups of participants show similar percentages of postverbal subjects (48.0%, 45.2%, and 49.7%). In the two interrogative GJ tasks (A-test and B-test), a similar pattern in the acceptance of postverbal subjects is observed. Besides this similar pattern, the two interrogative tests have the same statistical significance (*p* value is of .000). In interrogative sentences, my hypothesis is confirmed in regard to the postverbal position of subjects. I hypothesized that, if the El Cibao participants are undergoing a parametric change, the older participants should show higher percentages of postverbal subjects than the younger ones. As observed in figure 4.2., the three older groups of participants show higher percentages of postverbal subjects than the youngest group.

In table 4.19. I present the percentage of postverbal subjects selected by the participants from El Cibao according to their age range in declarative sentences (in the C-test).

Table 4.19.: Cross-tabulation of speakers from El Cibao with regard to postverbal subjects in declaratives according to age – C-test (N = 623)

El Cibao		**C-Test** (N = 623)
Age 18-29	**Preverbal**	N = 77 60.6%
	Postverbal	N = 19 15.0%
	Null	N = 31 24.4%
	Total age 18-29 per task	N = 127 100.0%
Age 30-39	**Preverbal**	N = 62 33.3%
	Postverbal	N = 44 23.7%
	Null	N = 80 43.0%
	Total age 30-39 per task	N = 186 100.0%
Age 40-50	**Preverbal**	N = 20 21.5%
	Postverbal	N = 38 40.9%
	Null	N = 35 37.6%
	Total age 40-50 per task	N = 93 100.0%
Age over 50	**Preverbal**	N = 76 35.0%
	Postverbal	N = 82 37.8%
	Null	N = 59 27.2%
	Total age over 50 per task	N = 217 100.0%

Chi-square: *57.326* *p=<.000>*

As illustrated in table 4.19., the higher percentage of postverbal subjects is found among the participants between 40-50 years old (40.9%) and the lowest percentage among the age group between 18-29 (15.0%). In the C-test, in general, as the age of the El Cibao participants increases, the percentage of postverbal subjects also increases. The results in the C-test are statistically significant (chi-square is 57.326, and *p* value is of .000).

A summary of the postverbal acceptance of subjects in the three GJ tasks can be observed in figure 4.3. below.

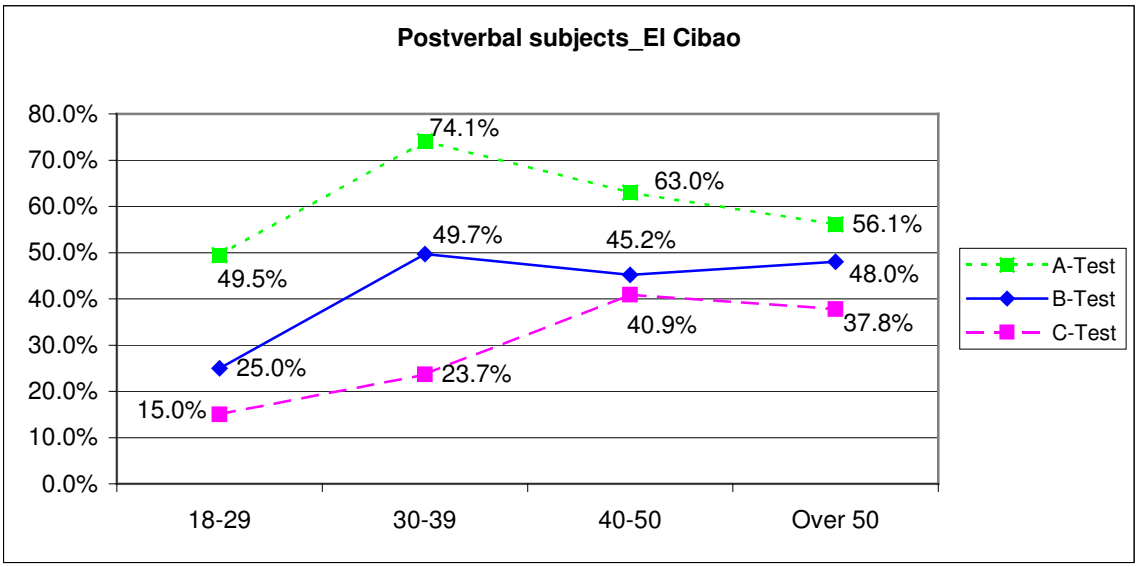

Figure 4.3.: Postverbal subjects in interrogative (A-test and B-test) and declarative sentences (C-test) by the participants from El Cibao, according to their age-range.

As illustrated in figure 4.3. and tables 4.18. and 4.19, a general tendency is observed among the youngest participants. These participants (age 18 – 29) selected the lowest percentages of postverbal subjects in the three GJ tasks. It can be suggested that the parametric change may be affecting this property (subject-verb inversion) among the youngest participants from El Cibao in declarative and in interrogative sentences. On the other hand, as illustrated in figure 4.3., a different pattern in the selection of postverbal subjects is observed in interrogative (in the A-test and B-test) and in declarative sentences (C-test). The three older groups of participants show a tendency to decrease the acceptance of postverbal subjects in interrogative sentences, and to increase the percentages of postverbal subjects in declarative ones. In fact, in declarative sentences, postverbal subjects show a general tendency to increase along with the age of the participants. This hypothesized change is more clearly observed in declarative sentences

than in interrogative ones. Hence, postverbal subjects are more accepted among the oldest participants and less accepted among the youngest ones in declarative ones. These results suggest that the loss of the subject-verb inversion property affect differently declarative and interrogative sentences.

The effect that the age of the El Cibao participants has over the expletive property is analyzed in table 4.20. and figure 4.4. In table 4.20 and figure 4.4. I present the acceptance of expletive subjects in the B-test (interrogative sentences) and C-test (declarative ones) by the monolingual speakers of El Cibao. It is worth recalling that the items testing expletive subjects are low. Furthermore, the following table represents only the data obtained by one monolingual group (El Cibao) in two GJ tasks. Therefore, low numbers are expected in the following table, and generalizations should not be drawn from these results. That is, these results only present a general pattern.

Table 4.20.: Cross-tabulation of speakers from El Cibao with regard to expletives in declaratives and interrogatives according to age – B-Test and C-test (N = 102)

Expletives_El Cibao		B-Test	C-Test	Total
Age 18-29	**Null**	N = 10 76.9%	N = 8 88.9%	N = 18 81.8%
	Overt	N = 3 23.1%	N = 1 11.1%	N = 4 18.2%
	Total age 18-29 per task	N = 13 100.0%	N = 9 100.0%	N = 22 100.0%
Age 30-39	**Null**	N = 13 72.2%	N = 12 100.0%	N = 25 83.3%
	Overt	N = 5 27.8%	N = 0 .0%	N = 5 16.7%
	Total age 30-39 per task	N = 18 100.0%	N = 12 100.0%	N = 30 100.0%
Age 40-50	**Null**	N = 6 66.7%	N = 4 66.7%	N = 10 66.7%
	Overt	N = 3 33.3%	N = 2 33.3%	N = 5 33.3%
	Total age 40-50 per task	N = 9 100.0%	N = 6 100.0%	N = 15 100.0%
Age over 50	**Null**	N = 8 38.1%	N = 8 57.1%	N = 16 45.7%
	Overt	N = 13 61.9%	N = 6 42.9%	N = 19 54.3%
	Total age over 50 per task	N = 21 100.0%	N = 14 100.0%	N = 35 100.0%

B-test: Chi-square: *7.066* *p=<.070>*
C-test: Chi-square: *8.017* *p=<.046>*

The number of items analyzed in table 4.20. is not very high. Therefore, this table does not allow us to draw conclusions or generalizations. Nontheless, some general tendencies can be found. After observing the gray cells in table 4.20., in the two GJ tasks, the younger the participants are, the less they accept overt expletives. The oldest participants selected more overt expletives than the youngest ones. It is also noted that overt expletives are more accepted in interrogative sentences than in declarative ones. These results suggest that, even with expletive subjects, the nominal value in Agr is different in declarative and in interrogative sentences, or that word order in each type of sentence is

derived differently. A better illustration of this tendency can be observed in figure 4.4. below.

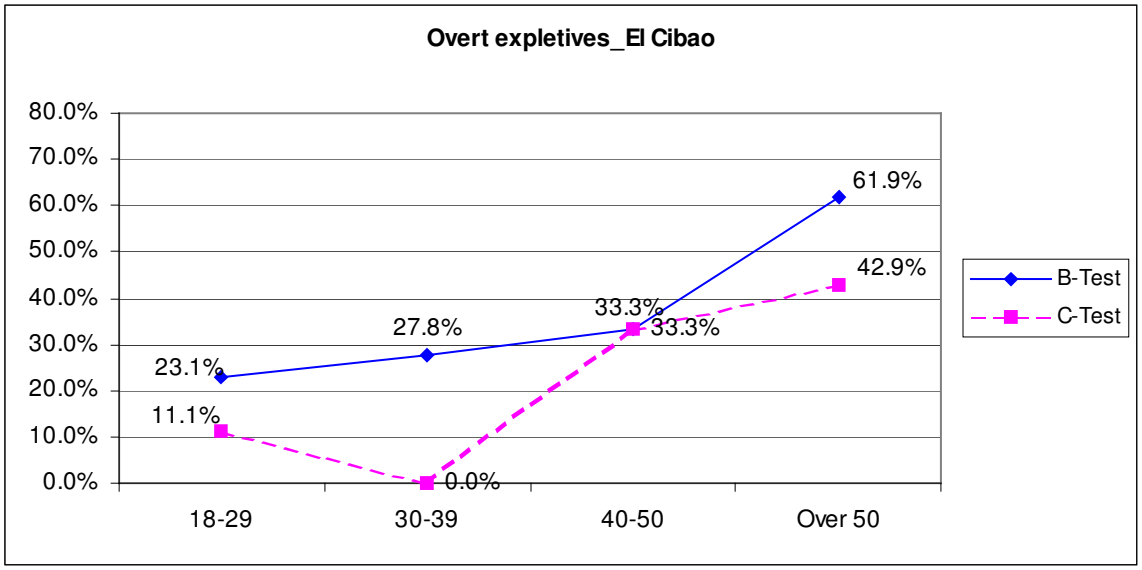

Figure 4.4.: Overt expletives in interrogative (B-test) and declarative sentences (C-test) by the participants from El Cibao, according to their age-range.

Figure 4.4. illustrates that in the B-test (i.e., interrogative sentences), the selection of overt expletives decreases among the youngest participants. Specifically, the frequency of overt expletives decreases from 61.9% among the participants over 50 years old, to 33.3% in the 40 - 50 age-range, to 27.8% in the 30 - 39 age range, and finally to 23.1% in the 18 – 29 age range. Other variables (apart from the ones in table 4.20.) may be intervening in the acceptance of expletives in the B-test (chi-square is 7.066 and *p* value is of .070). In the C-test, i.e., in declarative sentences, the two oldest groups selected a higher percentage of overt expletives than the two youngest groups. Specifically, in the C-test, the participants over 50 selected 42.9% overt expletives, and the speakers between 40-50 opted for 33.3%. On the other hand, the 30-39 age-group did not accept any overt expletives (0.0%) in the C-test, and the youngest group (between 18-29) selected 11.1%

overt expletives. In the C-test, these data are statistically significant, as observed in table 4.20. (chi-square is 8.017, and *p* value is of .046).

In both GJ tasks (B-test and C-test), the oldest group of participants (age over 50) shows the highest percentages of overt expletives (61.9% and 42.9%, respectively), followed by the participants between 40 and 50 years old (33.3% in both GJ tasks).

Summing up the results on expletive subjects, the change in the parametric value cannot be confirmed in this property, since the percentage of overt expletives among the youngest participants is lower than among the oldest ones. These results suggest that the selection of the expletive property is undergoing a change. Specifically, this property is showing a tendency to disappear among the youngest participants. Out of the four *pro*-drop properties, the expletive property may be among the most stigmatized ones, tending towards its disappearance. Another possibility is that younger participants are more aware of this property, and they do not accept it when they are explicitly asked to judge it. Perhaps, this property may be stigmatized among younger speakers, and the task used to investigate its distribution may not be adequate.

Finally, the change in the parametric value among the participants from El Cibao is also observed in one more *pro*-drop property: the violation of the *that*-trace filter. Table 4.21. presents the cross-tabulation of speakers from El Cibao with regard to null complementizers in *that*-trace constructions in interrogative sentences (A-test and B-test) according to their age. In the following table low numbers are expected since the number of items examining these constructions was not very high, and only one of the monolingual groups is analyzed. Consequently, the results in table 4.21. present a pattern, but generalizations should not be drawn from these data.

Table 4.21.: Cross-tabulation of speakers from El Cibao with regard to null complementizers in *that*-trace constructions in interrogatives according to age – A-test and B-test (N = 160)

***That*-trace filter El Cibao**		**A-Test**	**B-Test**	**Total**
Age 18-29	**Accept Null compl.**	N = 11 68.8%	N = 8 50.0%	N = 19 59.4%
	NOT accept Null compl.	N = 5 31.3%	N = 8 50.0%	N = 13 40.6%
	Total age 18-29 per task	N = 16 100.0%	N = 16 100.0%	N = 32 100.0%
Age 30-39	**Accept Null compl.**	N = 18 75.0%	N = 16 66.7%	N = 34 70.8%
	NOT accept Null compl.	N = 6 25.0%	N = 8 33.3%	N = 14 29.2%
	Total age 30-39 per task	N = 24 100.0%	N = 24 100.0%	N = 48 100.0%
Age 40-50	**Accept Null compl.**	N = 10 83.3%	N = 12 100.0%	N = 22 91.7%
	NOT accept Null compl.	N = 2 16.7%	N = 0 .0%	N = 2 8.3%
	Total age 40-50 per task	N = 12 100.0%	N = 12 100.0%	N = 24 100.0%
Age over 50	**Accept Null compl.**	N = 26 92.9%	N = 28 100.0%	N = 54 96.4%
	NOT accept Null compl.	N = 2 7.1%	N = 0 .0%	N = 2 3.6%
	Total age over 50 per task	N = 28 100.0%	N = 28 100.0%	N = 56 100.0%

A-test: Chi-square: *4.767* *p=<.190>*
B-test: Chi-square: *21.667* *p=<.000>*

Although the number of instances is too low to draw conclusions, as shown in the gray cells in table 4.21., both tasks (A-test and B-test) present a similar pattern. The two tasks present a higher acceptance of null complementizers among the older participants than among the younger ones. This pattern is better perceived in figure 4.5., where one observes the representation of the percentages in the gray cells of table 4.21. Therefore, figure 4.5. represents the acceptance of interrogative sentences with null complementizers by the participants from El Cibao.

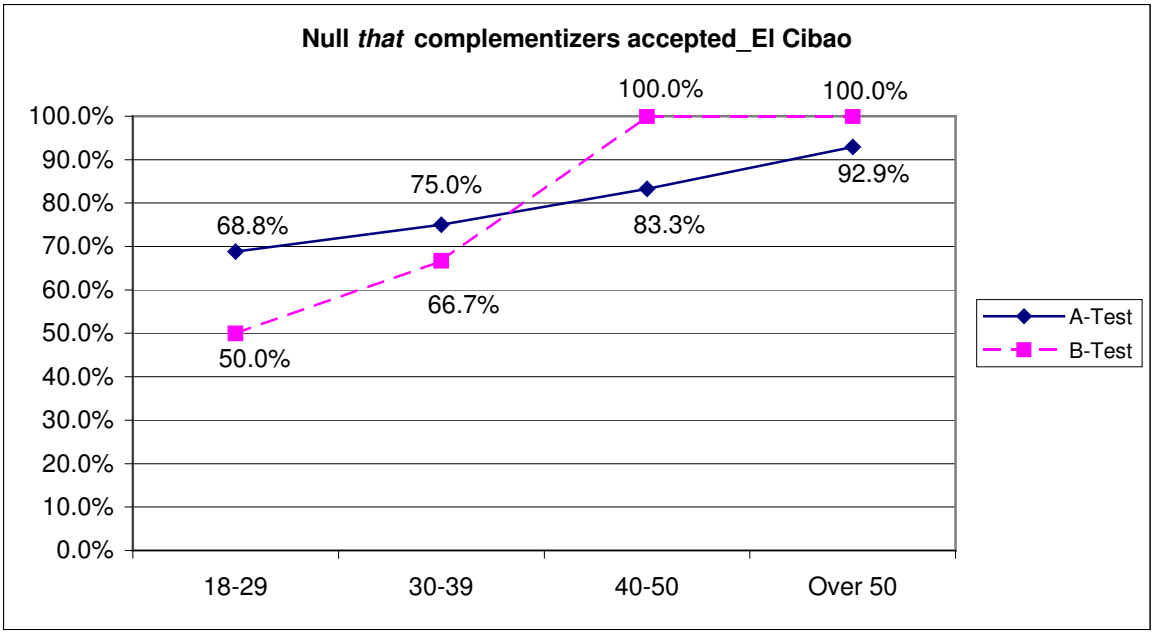

Figure 4.5.: Null complementizers in interrogative sentences (A-test and B-test) by the participants from El Cibao, according to their age-range.

As per figure 4.5., in both tasks (especially in the B-test), the older the participants are, the more null complementizers they accept in interrogative sentences. This tendency shows that the younger participants in El Cibao reject more interrogative sentences with null complementizers than the older participants; i.e., the youngest participants violate the *that*-trace filter more than the oldest groups. For instance, in the B-test all the participants 40 years old or older (100.0%) selected *that*-trace constructions with a null complementizer.

The hypothesis is not confirmed with respect to the violation of the *that*-trace filter. It could be suggested that the violation of the *that*-trace filter is undergoing a change among the younger participants. Perhaps, the youngest groups are more sensitive to prescriptive grammar than the oldest age groups. It is worth noting that the variables in table 4.21. are only statistically significant in the B-test (chi-square is 21.667 and *p* value is of .000), but not in the A-test (chi-square is 4.767 and *p* value is of .190). In the latter

case, other variables (such as the level of education reached by the El Cibao participants) may be intervening in the acceptance of null complementizers.

Two main conclusions can be reached with respect to the effect that age of the participants from El Cibao has over the four *pro*-drop properties analyzed in this study. First, the youngest group shows a different pattern from the other three groups; and second, the oldest population shows different parametric values from typical [+ *pro*-drop] languages. In reference to the former conclusion, the youngest group of El Cibao participants shows a tendency to reject more null complementizers in interrogative sentences, and to accept less null subjects, less postverbal ones, and less overt expletives than the other age groups from El Cibao. Therefore, their grammar seems to be undergoing a change from the GS grammar in some aspects (less acceptance of null and postverbal subjects) and not in others (null complementizers and overt expletives are more rejected). On the other hand, with respect to the second conclusion, the oldest participants from El Cibao (age over 50) demonstrate a change in the parametric value, tending towards [- *pro*-drop] like languages. For example, they accept fewer null subjects in declarative and interrogative sentences (i.e., they prefer overt ones), as well as less postverbal ones in interrogative sentences, more overt expletives, and more null complementizers.

In conclusion, the tenth hypothesis is not confirmed. In my tenth hypothesis, I proposed that if the El Cibao speakers are undergoing a process of parametric change, then the older participants will show more null, postverbal, and expletive subjects than the younger ones, as well as higher percentage of violations of the *that*-trace filter.

4.2.5.2. Social factors – Level of education in Santo Domingo-: Results from the GJs (A-test, B-test, and C-test)

Another social factor examined in this study is the level of education of the speakers. This social variable is only considered among the participants from Santo Domingo, since they belong to a wider range of educational levels than the other two DS groups. In my eleventh hypothesis (as presented in chapter 1), I propose that if the educational level influences the four properties of the *pro*-drop parameter, then I should find that the speakers with higher levels of education will show more null and more postverbal subjects, as well as less overt expletives, and more violations of the *that*-trace filter. This hypothesis is addressed in tables 4.22. – 4.26.

In table 4.22. I examine the first part of the hypothesis. Table 4.22. presents a cross-tabulation of speakers from Santo Domingo with regard to null subjects in interrogative sentences (B-test) and declarative ones (C-test) according to level of education. The total number of items analyzed in the gray cells of table 4.22. (N = 386)[173] only refers to the null selection of subjects in the B-test and C-test. It should be considered that the results presented in the following table only analyze one of the monolingual groups in two GJ tasks. Therefore, some numbers may be low.

[173] This total number is obtained adding the total numbers in the gray cells (i.e., 99, 121, and 166).

Table 4.22.: Cross-tabulation of speakers from Santo Domingo with regard to null subjects in declaratives and interrogatives according to level of education –B-test and C-test (N = 1182)

Santo Domingo		**B-test (interrogatives)**	**C-Test (declaratives)**	**Total**
Elementary (finished or not)	**Null**	N = 40 28.4%	N = 59 38.1%	N = 99 33.4%
	Overt	N = 101 71.6%	N = 96 61.9%	N = 197 66.6%
	Total per task	N = 141 100.0%	N = 155 100.0%	N = 296 100.0%
Secondary and vocational	**Null**	N = 50 29.6%	N = 71 38.2%	N = 121 34.1%
	Overt	N = 119 70.4%	N = 115 61.8%	N = 234 65.9%
	Total per task	N = 169 100.0%	N = 186 100.0%	N = 355 100.0%
University education (Finished or ongoing)	**Null**	N = 84 33.3%	N = 82 29.4%	N = 166 31.3%
	Overt	N = 168 66.7%	N = 197 70.6%	N = 365 68.7%
	Total per task	N = 252 100.0%	N = 279 100.0%	N = 531 100.0%

Elementary: Chi-square: *44.789* *p=<.000>*
Secondary: Chi-square: *56.457* *p=<.000>*
University: Chi-square: *97.555* *p=<.000>*

As presented in the gray cells in table 4.22., the percentage of null subjects accepted by each educational level group in the B-test is similar, although there is a small increase in the number of null subjects accepted among the group with a higher level of education. In the B-test, the Santo Domingo participants with university education (the highest level of education) show a slightly stronger preference of null subjects (33.3%), whereas the speakers who achieved elementary school selected 28.4% null subjects. In the C-test, the two groups with the lowest levels of education show higher percentages of null subjects in declarative sentences (in the C-test) than in interrogative ones (in the B-test), but this is not the case with the more educated speakers (i.e., with university education). The participants with university education have 29.4% null subjects in the C-test, and 33.3%

in the B-test. Nonetheless, the selection of overt versus null subjects according to the educational level of the Santo Domingo participants does not show important differences in any GJ task (especially in the B-test). In the C-test, the two less educated groups of participants (elementary and secondary education) selected more null subjects (38.1% and 38.2%) than the university educated group (29.4%).

The first part of my hypothesis cannot be confirmed due to the lack of statistical significance. The percentages show that the first part of my hypothesis could be confirmed in interrogative sentences (B-test), but not in declarative ones (C-test). However, the lack of statistical significance of the B-test (chi-square is 1.256 and *p* value is of .534) suggests that other variables may be intervening in the selection of subjects by the Santo Domingo speakers. Therefore, an apparent education-related effect is observed in the B-test (i.e., the higher educated participants show higher percentages of null subjects than the less educated participants). A closer look to the percentages shows that the three educational groups have very similar percentages of null subjects. On the other hand, in declarative sentences, my hypothesis is not confirmed, since the participants with the highest educational levels present the lowest percentage of null subjects. In the C-test, (table 4.22.) the level of education achieved by the participants shows statistically significant data, since the results obtained from the participants of the three levels of education have a *p* value of .000. None of the two GJ tasks analyzing the property of phonologically null subjects (i.e., B-test and the C-test) confirms the first part of the hypothesis; i.e., the higher educational level does not mean higher percentages of null subjects.

The second part of the hypothesis refers to the acceptance of postverbal subjects, according to the level of education of the participants from Santo Domingo. In order to address this part of the hypothesis, two tables (4.23. and 4.24.) are presented. In table 4.23., there is a cross-tabulation of speakers from Santo Domingo with regard to postverbal subjects in the two GJ tasks testing interrogatives (A-test and B-test), according to their level of education. In table 4.23., the total number of subjects analyzed (N = 400)[174] refers to the selection of postverbal subjects in the two interrogative GJ tasks (A-test and B-test). Although the cells in gray may present low numbers, it should be noted that they reflect the postverbal selection of subjects in only two tasks by one monolingual group (Santo Domingo).

[174] The total number of postverbal subjects is obtained after adding the total number of postverbal subjects per educational level.

Table 4.23.: Cross-tabulation of speakers from Santo Domingo with regard to postverbal subjects in interrogatives, according to their level of education. A-test and B-test (N = 1102)

		A-test (interrogatives)	**B-test (interrogatives)**	**Total per educational level**
Elementary (finished or not)	**Null**	-	N = 40 28.4%	N = 40 14.5%
	Preverbal	N = 72 53.3%	N = 56 39.7%	N = 128 46.4%
	Postverbal	N = 63 46.7%	N = 45 31.9%	N = 108 39.1%
	Total per task	N = 135 100.0%	N = 141 100.0%	N = 276 100.0%
Secondary and vocational	**Null**	-	N = 50 29.6%	N = 50 15.1%
	Preverbal	N = 100 61.7%	N = 63 37.3%	N = 163 49.2%
	Postverbal	N = 62 38.3%	N = 56 33.1%	N = 118 35.6%
	Total per task	N = 162 100.0%	N = 169 100.0%	N = 331 100.0%
University education (Finished or ongoing)	**Null**	-	N = 84 33.3%	N = 84 17.0%
	Preverbal	N = 139 57.2%	N = 98 38.9%	N = 237 47.9%
	Postverbal	N = 104 42.8%	N = 70 27.8%	N = 174 35.2%
	Total per task	N = 243 100.0%	N = 252 100.0%	N = 495 100.0%

Elementary: Chi-square: *44.891* *p=<.000>*
Secondary: Chi-square: *58.582* *p=<.000>*
University: Chi-square: *97.605* *p=<.000>*

As observed in the gray cells in table 4.23., the percentages of postverbal subjects in the two GJ tasks testing interrogative sentences (A-test and B-test) differ among the Santo Domingo participants according to their level of education. For instance, in the A-test, the highest percentage of postverbal subjects is found in the group with elementary education (46.7%), whereas the lowest percentage of postverbal subjects is found among those who reached up to secondary and vocational education (38.3%). But in the B-test, the lowest

percentage of postverbal subjects is found among the participants with university education (27.8%), and the highest percentage of postverbal subjects is selected by the participants with secondary and vocational education (33.1%). As observed in the column of the total amount of subjects per educational level, the highest percentage of postverbal subjects in both tasks (A-test and B-test) is found among the participants who reached elementary education (39.1%). The other two educational groups (secondary/vocational and university) have a similar percentage of postverbal subjects (35.6% and 35.2%, respectively). The difference between the results in the A-test and B-test may be caused by the type of test itself, since in the A-test, the participants could not select null subjects. According to the statistical significance, none of the two GJ tasks are statistically significant (in the A-test, *p* value is of .341; and in the B-test, *p* value is of .720), whereas the statistical value of the different educational levels shows that they are significant (the three educational groups have a *p* value of .000).

The second part of my hypothesis expected that the participants with higher education would select higher percentages of postverbal subjects. But this is not confirmed with interrogative sentences, due to the lack of statistical significance in the two tasks, and to the percentages of postverbal subjects. In the two tasks testing their competence in interrogative sentences (A-test and B-test), the Santo Domingo participants with a higher level of education (university and secondary/vocational) do not show higher percentages of postverbal subjects than the lower educated ones (elementary education).

The inversion property is also analyzed in a GJ task testing declarative sentences (C-test). Table 4.24. presents the postverbal position of subjects in declaratives according

to the level of education of the Santo Domingo speakers. The numbers presented in the gray cells are low because they present the postverbal selection of subjects in one GJ task by only one group of monolingual participants.

Table 4.24.: Cross-tabulation of speakers from Santo Domingo with regard to postverbal subjects in declaratives, according to their level of education. C-test (N = 620)

		C-Test (declaratives)
Elementary (finished or not)	**Null**	N = 59 38.1%
	Preverbal	N = 80 51.6%
	Postverbal	N = 16 10.3%
	Total per task	N = 155 100.0%
Secondary and vocational	**Null**	N = 71 38.2%
	Preverbal	N = 80 43.0%
	Postverbal	N = 35 18.8%
	Total per task	N = 186 100.0%
University education (Finished or ongoing)	**Null**	N = 82 29.4%
	Preverbal	N = 159 57.0%
	Postverbal	N = 38 13.6%
	Total per task	N = 279 100.0%

Chi-square: *12.102* *p=<.017>*

In the gray cells in table 4.24., the percentage of postverbal subjects according to the level of education among the Santo Domingo speakers is illustrated. Although no conclusion can be reached due the low numbers in table 4.24., some explanations can be presented. In table 4.24., the group of participants who reached up to secondary or vocational education has the highest percentage of postverbal subjects in the C-test (18.8%), whereas the speakers who received up to elementary education selected the least

amount of postverbal subjects (10.3%). In declarative sentences (according to the results obtained in the C-test), the educational level seems to slightly affect the postverbal position of subjects. However, the statistical significance of table 4.24. (*p* value is of .017) suggests that the correlation between the level of education of the Santo Domingo participants and their selection of null, preverbal, or postverbal subjects in the C-test is significant.

As illustrated in tables 4.23. and 4.24., in the A-test and B-test no correlation was found between the educational level of the Santo Domingo participants and their subject selection (specifically the subject-verb inversion property); but in the C-test, a mild correlation between these variables can be found. In interrogative sentences there is evidence that the strength value of T does not change according to the level of education achieved by the Santo Domingo participants. Such evidence is not found in declarative sentences. Therefore, my hypothesis is partially confirmed with respect to the inversion property. Specifically, the postverbal position of subjects seems to be affected by the high educational level of the participants only in declarative sentences (C-test), but not in interrogative sentences (A-test and B-test).

Results concerning hypothesis eleven, i.e., the effect that the level of education may have over the representation of the expletive subjects by the speakers from Santo Domingo, are presented in table 4.25. Although table 4.25. presents the overt and null selection of overt expletives in the B-test and C-test, I will refer here only to the cross-tabulation with regard to overt expletives (cells in gray) according to the level of education of the Santo Domingo participants. The numbers analyzed in the following

table are low since they illustrate the items testing expletive subjects in two of the GJ tasks, as they were selected by one monolingual group of participants.

Table 4.25.: Cross-tabulation of speakers from Santo Domingo with regard to overt expletives, according to their level of education in interrogatives and declaratives. B-test and C-test (N = 102)

Expletives		**B-test (interrogatives)**	**C-Test (declaratives)**	**Total per educational level**
Elementary (finished or not)	**Null**	N = 12 70.6%	N = 10 100.0%	N = 22 81.5%
	Overt	N = 5 29.4%	N = 0 0.0%	N = 5 18.5%
	Total per task	N = 17 100.0%	N = 10 100.0%	N = 27 100.0%
Secondary and vocational	**Null**	N = 17 94.4%	N = 11 91.7%	N = 28 93.3%
	Overt	N = 1 5.6%	N = 1 8.3%	N = 2 6.7%
	Total per task	N = 18 100.0%	N = 12 100.0%	N = 30 100.0%
University education (Finished or ongoing)	**Null**	N = 22 81.5%	N = 16 88.9%	N = 38 84.4%
	Overt	N = 5 18.5%	N = 2 11.1%	N = 7 15.6%
	Total per task	N = 27 100.0%	N = 18 100.0%	N = 45 100.0%

Elementary: Chi-square: *3.610* *p=<.057>*
Secondary: Chi-square: *.089* *p=<.765>*
University: Chi-square: *.451* *p=<.502>*

Table 4.25. shows in the gray cells the percentages and number of overt expletives in the B-test and C-test. As observed in the number of items, the numbers are very low and, consequently, further evidence is needed to confirm that a change is taking place. Table 4.25. presents the acceptance of overt expletives according to the level of education achieved by the Santo Domingo speakers. It shows that the participants who reached up to elementary education show very dissimilar percentages in the B-test and C-test. For instance, in the B-test, they selected 29.4% overt expletives, whereas in the C-test, they

did not choose any overt subject (0.0%). However, the statistical significance of this group shows that the *p* value is of .057. On the other hand, the participants with secondary or vocational education demonstrate the lowest percentages of overt expletives among the Santo Domingo participants in the interrogative and declarative GJ tasks (5.6% and 8.3%, respectively). But this educational group (secondary/vocational education) does not show statistically significant data (*p* value is of .765). Finally, the Santo Domingo participants with the highest educational level (university education) have a higher percentage of overt expletives in interrogative sentences (B-test) than in declarative ones, i.e., in the C-task (18.5% and 11.1%, respectively). Nonetheless, the university education group is not statistically significant for my hypothesis (*p* value is of .502).

As observed in the percentages in table 4.25., the level of education achieved by the Santo Domingo speakers does not seem to affect this *pro*-drop property (expletives). Therefore, my hypothesis cannot be confirmed. The shaded cells in the column illustrate that the elementary education group shows the highest percentage of overt expletives in Santo Domingo. It is noteworthy that all the overt expletives selected by the elementary education group are in the B-test (interrogative sentences). Furthermore, the only educational group that can be considered statistically significant for my hypothesis is the elementary education group, although their *p* value is of .057, i.e., it is slightly higher the level accepted in this study (*p* value should not be higher than .050).

Finally, the validity of my hypothesis is also evaluated in table 4.26., where I present the acceptance of null complementizers in the A-test and B-test (according to the level of education achieved by the Santo Domingo speakers). In table 4.26., I present the

total amount of *that*-trace structures selected in the A-test and B-test by the Santo Domingo participants, but I only comment the shaded cells. It is noteworthy that the number of items in the following table is low, since the table presents the number of items selected by the Santo Domingo group in regard to the *that*-trace property (which was also low) in two GJ tasks (A-test and B-test).

Table 4.26.: Cross-tabulation of speakers from Santo Domingo with regard to overt complementizers in *that*-trace structures, according to their level of education in interrogatives. A-test and B-test (N = 160)

Complementizers		**A-test (interrogatives)**	**B-test (interrogatives)**	**Total per educational level**
Elementary and elementary not finished	**Accept Null compl.**	N = 10 50.0%	N = 13 65.0%	N = 23 57.5%
	NOT accept Null compl.	N = 10 50.0%	N = 7 35.0%	N = 17 42.5%
	Total per task	N = 20 100.0%	N = 20 100.0%	N = 40 100.0%
Secondary and vocational	**Accept Null compl.**	N = 13 54.2%	N = 19 79.2%	N = 32 66.7%
	NOT accept Null compl.	N = 11 45.8%	N = 5 20.8%	N = 16 33.3%
	Total per task	N = 24 100.0%	N = 24 100.0%	N = 48 100.0%
University education (Finished or ongoing)	**Accept Null compl.**	N = 22 61.1%	N = 27 75.0%	N = 49 68.1%
	NOT accept Null compl.	N = 14 38.9%	N = 9 25.0%	N = 23 31.9%
	Total per task	N = 36 100.0%	N = 36 100.0%	N = 72 100.0%

Elementary: Chi-square: *.921* *p=<.337>*
Secondary: Chi-square: *3.375* *p=<.066>*
University: Chi-square: *1.597* *p=<.206>*

Note that, although the numbers in table 4.26. are low for drawing generalizations, they still merit some comments. The last column in table 4.26. illustrates that the highest acceptance of null complementizers in *that*-trace constructions in the two tasks (A-test and B-test) is found among the higher educated participants (university education), who

accepted 68.1% null somplementizers. The university educated group is followed by the secondary/vocational group in the acceptance of null complementizers (66.7%). Finally, the lower educated participants have the lowest percentage of acceptance of null complementizers (57.5%). Therefore, according to the percentages in the last column ('Total per educational level'), the acceptance of null complementizers decreases with the educational level of the participants. However, none of the three groups show statistically significant data, as observed in the *p* values below table 4.26. Therefore, my hypothesis with respect to the *that*-trace property cannot be confirmed for several reasons. First, the data are not statistically significant; and second, the participants with higher educational levels do not show a lower acceptance of null complementizers, as my hypothesis suggested.

The results of the elementary education group (tables 4.25. and 4.26.) present that the participants of this group have the highest percentage of overt expletives (18.5%), but they have the lowest percentage in the acceptance of null complementizers (57.5%). These results suggest that the expletive property may be affected by the level of education, but the *that*-trace filter property does not seem to be affected by the level of education of the Santo Domingo participants. Nonetheless, the statistical significance of the elementary education group in tables 4.25. and 4.26. shows that only table 4.25. is significant (expletives), whereas some other variables may be affecting the results of the elementary education group in table 4.26. (*that*-trace filter).

Summing up the results addressing my eleventh hypothesis, it can be concluded that hypothesis eleven is not confirmed. That is, the educational level of the Santo Domingo participants does not seem to be affecting any of the properties described

above, i.e., a correlation between the loss of one of the *pro*-drop properties and the level of education achieved by the participants is not found. But, since the numbers are low in some of the properties studied (especially expletives and *that*-trace filter), no generalizations can be reached in these properties, but comments are afforded.

4.2.5.3. Social factors – Origin: Results from the GJs (A-test, B-test, and C-test) by the three DS groups

In this section of the chapter, the two monolingual groups already presented in the sections above are compared with the bilingual group. Specifically, I refer to those hypotheses that concern differences between monolingual and bilingual speakers. It is important to consider the different origins of the participants in order to observe a possible linguistic effect due to language contact (in the case of the bilinguals). Therefore, comparing the two groups of monolingual speakers, and the bilingual group (DS bilingual students residing in N.J.) will provide evidence to confirm or reject a possible effect of language contact.

4.2.5.3.1. Overt and null subjects (Social factors – Origin)

In hypothesis twelve (as presented in chapter 1), I proposed that if monolingual varieties (El Cibao and Santo Domingo) show a higher tendency to adopt the [- strong] nominal features in Agr, then one should find in these varieties a higher percentage of overt subjects than in the bilingual speakers. In order to observe the validity of this hypothesis, table 4.27. presents a cross-tabulation of the three groups of DS speakers (El Cibao, Santo Domingo, and bilinguals) with regard to overt subjects in interrogative and

declarative sentences (B-test and C-test). Table 4.27. presents the percentages of overt and null subjects chosen by each DS group, but I focus on the gray cells, which refer to the amount of overt subjects selected by each group in the B-test and C-test.

Table 4.27.: Cross-tabulation of speakers from El Cibao, Santo Domingo and bilinguals with regard to overt subjects in interrogatives and declaratives – B-test and C-test (N = 3758)

		El Cibao	**Santo Domingo**	**Bilinguals**	**Total**
B-test (interrogatives)	**Null**	N = 149 26.6%	N = 174 31.0%	N = 261 37.6%	N = 584 32.1%
	Overt	N = 412 73.4%	N = 388 69.0%	N = 434 62.4%	N = 1234 67.9%
	Total per origin	N = 561 100.0%	N = 562 100.0%	N = 695 100.0%	N = 1818 100.0%
C-test (declaratives)	**Null**	N = 205 32.9%	N = 212 34.2%	N = 226 32.4%	N = 643 33.1%
	Overt	N = 418 67.1%	N = 408 65.8%	N = 471 67.6%	N = 1297 66.9%
	Total per origin	N = 623 100.0%	N = 620 100.0%	N = 697 100.0%	N = 1940 100.0%

El Cibao: Chi-square: *5.671* *p=<.017>*
Santo Domingo: Chi-square: *1.401* *p=<.237>*
Bilingual: Chi-square: *4.025* *p=<.045>*

As the shaded cells in table 4.27. illustrate, the three groups of DS participants tend to demonstrate a preference for overt subjects over null ones in the B-test and C-test. In the B-test (which is statistically significant with a *p* value of .000), the participants from El Cibao have the highest percentage of overt subjects (73.4%), whereas the bilingual speakers have the lowest percentage (62.4%). It should be noted that these two groups (El Cibao and bilingual) show statistically significant results (El Cibao group has a *p* value of .017, and the bilingual group has a *p* value of .045), whereas the group from Santo Domingo does not (*p* value is of .237). In the C-test, the highest percentage of overt subjects is found in the bilingual group (67.6%), although the El Cibao group has a very

similar percentage of overt subjects (67.1%). The Santo Domingo group has a slightly lower percentage of overt subjects (65.8%) than the other two groups in the C-test.

The results illustrated in table 4.27. show that my hypothesis is confirmed only in the B-test (interrogative sentences), but not in the C-test (declarative sentences). In interrogative sentences (B-test), the two groups of monolingual DS speakers show more overt subjects than the bilingual group; but, in declarative sentences (C-test), they show less overt subjects than the bilingual group. Furthermore, the C-test is not statistically significant (*p* value is of .784), which suggests that some other variables may be affecting the results in this test (C-test), such as type of subject (for instance, person and number of the subject, or its pronominal or lexical nature). These results indicate that the nominal value in Agr may be affected by the type of sentence (interrogatives versus declaratives).

In hypothesis thirteen, I refer to the overt and null realization of subjects according to the person and number of the subject. I proposed that if monolingual (El Cibao, Santo Domingo) and bilingual DS varieties show a change close to the one happening in BP (Duarte, 2000), then I should encounter that the order in which the [+ strong] nominal values of Agr is lost will follow this pattern: 2 > 1 > 3 in the Dominican Republic and in the U.S. In order to observe the validity of this hypothesis, table 4.28. below presents a cross-tabulation of the three groups of speakers with regard to person and number in the B-test.

Table 4.28.: Cross-tabulation of speakers from El Cibao, Santo Domingo and bilinguals with regard to person and number in interrogative sentences - B-test (N = 1818).

B-test		**El Cibao**	**Santo Domingo**	**Bilingual**	**Total per subject person**
1st: *Yo, nosotros*	**Null**	N = 35 29.2%	N = 52 43.3%	N = 58 40.3%	N = 145 37.8%
	Overt	N = 85 70.8%	N = 68 56.7%	N = 86 59.7%	N = 239 62.2%
	Total 1st per origin	N = 120 100.0%	N = 120 100.0%	N = 144 100.0%	N = 384 100.0%
2nd: *Tú, usted, ustedes*	**Null**	N = 54 29.8%	N = 61 33.7%	N = 98 43.2%	N = 213 36.2%
	Overt	N = 127 70.2%	N = 120 66.3%	N = 129 56.8%	N = 376 63.8%
	Total 2nd per origin	N = 181 100.0%	N = 181 100.0%	N = 227 100.0%	N = 589 100.0%
3rd: *Él/ella, ellos/as*	**Null**	N = 60 23.1%	N = 61 23.4%	N = 105 32.4%	N = 226 26.7%
	Overt	N = 200 76.9%	N = 200 76.6%	N = 219 67.6%	N = 619 73.3%
	Total 3rd per origin	N = 260 100.0%	N = 261 100.0%	N = 324 100.0%	N = 845 100.0%

El Cibao: Chi-square: *3.030* *p=<.220>*
Santo Domingo: Chi-square: *16.263* *p=<.000>*
Bilingual: Chi-square: *7.170* *p=<.028>*

In table 4.28., the shaded cells present the group internal selection of overt subjects in each person and number subjects in the B-test. The last column in table 4.28. shows the overall percentage of subjects in regard to the subject person as they were selected by each group of participants. As observed in the last column, the highest percentage of overt subjects is found in third person subjects (73.3%), followed by second person (63.8%), and, finally, by first person subjects (62.2%). The following two paragraphs provide a detailed observation per DS group and per subject person.

Table 4.28. illustrates that, out of the three DS groups, the group from El Cibao presents the highest percentage of overt subjects in all person and number subjects. But

the El Cibao group is not statistically significant (chi-square is 3.030, and *p* value is of .220), whereas the other two groups show statistically significant data. The group from Santo Domingo shows the highest statistical significance level (*p* value is of .000), followed by the bilingual group (*p* value is of .028). Despite this difference in the statistical significance, an overview of the overt subjects' acceptance by each group is presented. El Cibao group has the highest percentage of overt subjects in third person (76.9%), followed by first person (70.8%), and finally by second person (70.2%). On the other hand, the rates of overt subjects selected by the Santo Domingo participants show that the highest percentage of overt subjects is found in third person (76.6%), followed by second person (70.2%), and finally by first person (56.7%). Finally, the bilingual group follows a similar pattern to the El Cibao group, and their data are statistically significant (*p* value is of .028). That is, the bilingual group also shows the highest percentage of overt subjects in third person subjects (67.6%), followed by first person (59.7%), and finally by second person subjects (56.8%).

A close observation of table 4.28. illustrates that in first person subjects, the group from El Cibao selected 70.8% overt subjects; followed by the bilingual group, who has a rate of 59.7% overt subjects; and finally, the Santo Domingo participants have the lowest rate of overt first person subjects (56.7%). In second person subjects, the group from El Cibao also shows the highest percentage of overt subjects (70.2%), followed by the Santo Domingo group (66.3%), and finally, the lowest percentage of overt second person subjects can be found among the bilingual group (56.8%). Finally, in third person subjects, the two monolingual groups have similar percentages of overt subjects (76.9% and 76.6%), whereas the bilingual group shows the lowest percentage of overt subjects

(67.6%). Statistically, third person subjects are the most statistically significant ones (*p* value is of .014), followed by second person subjects (*p* value is of .015), and finally by first person subjects (*p* value is of .057). Although, first person subjects are slightly above the accepted significance level set in this study.

Summing up the results from table 4.28., in the B-test (interrogative sentences) none of the DS groups in this study follow a similar pattern to the one found in BP. On the contrary, the highest percentage of overt subjects is found in third person subjects in all groups. Third person subjects have the highest statistically significance level. With respect to the groups, the Santo Domingo group is the most statistically significant one (*p* value is of .000), and they showed the highest percentage of overt subjects in third person, followed by second person, and finally by first person. In conclusion, the DS variety does not follow the same pattern as BP in regard to the loss of null subjects, which refutes my hypothesis.

In table 4.29., I present a cross-tabulation of the three groups of DS groups in regard to the overt acceptance of subjects according to the subject person and number in the C-test.

Table 4.29.: Cross-tabulation of speakers from El Cibao, Santo Domingo and bilinguals with regard to person and number in interrogative sentences - C-test (N = 1940).

C-test		El Cibao	Santo Domingo	Bilingual	Total per subject person
1st: *Yo, nosotros*	**Null**	N = 71 44.1%	N = 74 46.3%	N = 80 42.1%	N = 225 44.0%
	Overt	N = 90 55.9%	N = 86 53.8%	N = 110 57.9%	N = 286 56.0%
	Total 1st per origin	161 100.0%	N = 160 100.0%	N = 190 100.0%	N = 511 100.0%
2nd: *Tú, usted, ustedes*	**Null**	N = 77 31.8%	N = 77 32.1%	N = 91 33.7%	N = 245 32.6%
	Overt	N = 165 68.2%	N = 163 67.9%	N = 179 66.3%	N = 507 67.4%
	Total 2nd per origin	N = 242 100.0%	N = 240 100.0%	N = 270 100.0%	N = 752 100.0%
3rd: *Él/ella, ellos/as*	**Null**	N = 57 25.9%	N = 61 27.7%	N = 55 23.2%	N = 173 25.6%
	Overt	N = 163 74.1%	N = 159 72.3%	N = 182 76.8%	N = 504 74.4%
	Total 3rd per origin	N = 220 100.0%	N = 220 100.0%	N = 237 100.0%	N = 677 100.0%

El Cibao: Chi-square: *14.145* *p=<.001>*
Santo Domingo: Chi-square: *14.899* *p=<.001>*
Bilingual: Chi-square: *17.519* *p=<.000>*

The gray cells in table 4.29., present the selection of overt subjects by the three DS groups. First, a description of the overt subject selection per group of participants is presented, followed by an observation of the overt subjects per subject person.

The three groups behave alike in the selection of subjects in the C-test, and they all are statistically significant. El Cibao and Santo Domingo groups have a *p* value of .001, and the bilingual group has a *p* value of .000. In regard to the selection of overt subjects, the group from El Cibao shows the highest percentage of overt subjects in third person (74.1%), followed by second person (68.2%), and finally by first person (55.9%). The Santo Domingo's distribution of overt subjects is similar to El Cibao's one. Specifically, the Santo Domingo group has the highest percentage of overt subjects in

third person (72.3%), followed by second person (67.9%), and finally by first person (53.8%). Similarly, the bilingual group also shows the highest percentage of overt subjects in third person subjects (76.8%), followed by second person (66.3%), and finally by first person subjects (57.9%). Therefore, the three groups follow the same pattern for overt subjects in declarative sentences (C-test), i.e., the three groups selected more overt subjects in third person, followed by second person, and finally by first person.

None of the three person subjects is statistically significant.[175] A review of the distribution of overt subjects shows that the highest percentage of overt first person subjects is found among the bilingual group (57.9%), whereas the lowest percentage is found among the Santo Domingo participants (53.8%). In second person subjects, the highest percentage of overt subjects is found in El Cibao (68.2%) and the lowest percentage in the bilingual group (66.3%). Finally, third person subjects have a similar pattern to first person subjects. The bilingual group shows the highest percentage of overt subjects (76.8%), whereas the Santo Domingo group has the lowest percentage (72.3%).

Summing up the results from the last two tables (tables 4.28. and 4.29.), in the B-test and C-test, the distribution of overt and null subjects does not seem to follow the distribution followed by BP. In the B-test and C-test, the three groups of speakers show one common characteristic: the highest percentage of overt subjects is in third person.

With respect to the difference between interrogative (B-test) and declarative sentences (C-test), in interrogative sentences (B-test), the group from El Cibao and the bilingual one have a similar distribution in the overt acceptance of subjects (highest percentages in third person, and lowest percentages in second person). But, in declarative

[175] First person subjects have a *p* value of .739, second person subjects have a higher *p* value (*p* value is of .884), and third person has the lowest *p* value, but still very high (*p* is .536).

sentences (C-test), the three groups of DS speakers show a similar distribution in the overt acceptance of subjects. Specifically, the three groups of participants selected the highest percentages of overt subjects with third person subjects, followed by second person subjects, and finally by first person subjects. Consequently, my hypothesis is not confirmed, since the percentages of null and overt subjects selected by the DS do not follow the order in which null subjects were lost in BP.

4.2.5.3.2. Subject-verb inversion (Social factors – Origin)

As was previously presented, the nature of the subject (pronominal or lexical DP) can also affect the position of the subject. In my hypothesis seventeen (see chapter 1), I propose that if monolingual DS speakers (in El Cibao and Santo Domingo) show a higher preference for the [+ strong] verbal features in T than bilinguals, then I would expect that the monolingual group will show more postverbal subjects than the bilingual group (irrespective of the pronominal or lexical nature of the subjects). Tables 4.30. - 4.32. illustrate the postverbal position of subjects according to the pronominal or lexical nature of the subjects, in the three GJ tasks used in this study.

Tables 4.30. and 4.31. present the cross-tabulation of the three groups of speakers (El Cibao, Santo Domingo, and bilingual) with regard to the postverbal position of pronominal and lexical subjects in interrogative sentences. Specifically, table 4.30. refers to the A-test, whereas table 4.31. presents results of the B-test.

Table 4.30.: Cross-tabulation of speakers from El Cibao, Santo Domingo, and bilingual with regard to postverbal pronominal and lexical subjects in interrogatives – A-test (N = 1668)

A-test		**Preverbal**	**Postverbal**	**Total pron/lex**
El Cibao	**Pronominal**	N = 189 39.2%	N = 293 60.8%	N = 482 100.0%
	Lexical DP	N = 22 36.1%	N = 39 63.9%	N = 61 100.0%
	Total position	N = 211 38.9%	N = 332 61.1%	N = 543 100.0%
Santo Domingo	**Pronominal**	N = 267 55.6%	N = 213 44.4%	N = 480 100.0%
	Lexical DP	N = 44 73.3%	N = 16 26.7%	N = 60 100.0%
	Total position	N = 311 57.6%	N = 229 42.4%	N = 540 100.0%
Bilingual	**Pronominal**	N = 270 52.0%	N = 249 48.0%	N = 519 100.0%
	Lexical DP	N = 35 53.0%	N = 31 47.0%	N = 66 100.0%
	Total position	N = 305 52.1%	N = 280 47.9%	N = 585 100.0%

El Cibao: Chi-square: *.226* *p=<.635>*
Santo Domingo: Chi-square: *6.848* *p=<.009>*
Bilingual: Chi-square: .024 *p=<.877>*

Although table 4.30. illustrates the selection of preverbal and postverbal subjects of the three groups of participants in the A-test, according to the pronominal or lexical nature of the subject, I will only focus on the cells in gray, i.e. on postverbal subjects. These cells represent the quantity and the percentages of postverbal subjects selected by each DS group according to the pronominal or lexical nature of the subjects in the A-test. It is worth noting that the two types of subjects (pronominal and lexical ones) are statistically significant (their *p* value is of .000). El Cibao group shows a very similar percentage of postverbal subjects, irrespectively of the pronominal or lexical nature of the subject (60.8% and 63.9%, respectively). This is also the case of the bilingual participants. They also selected similar percentages of postverbal pronominal and lexical subjects in the A-

test (48.0% and 47.0%, respectively). But these two groups are not statistically significant (El Cibao has a *p* value of .635; and the bilingual group has a *p* value of .877). Unlike these two groups, the Santo Domingo group (which is statistically significant, with a *p* value of .009) shows different percentages of postverbal pronominal and lexical subjects. In their case, the percentage of postverbal subjects is much higher with pronominal subjects (44.4%) than with lexical ones (26.7%).

Due to the lack of statistical significance of the other two DS groups (El Cibao and bilingual), I will only consider the results from the Santo Domingo group to evaluate my hypothesis. In table 4.30., one observes that the Santo Domingo's selection of postverbal subjects is affected by the nature of the subject (more postverbal pronominal subjects than postverbal lexical ones). Comparing the results obtained from this monolingual group (Santo Domingo) and the bilingual one, one observes that the Santo Domingo participants selected a lower percentage of postverbal subjects than the bilingual group, which refutes my hypothesis. Furthermore, the bilingual group does not offer statistically significant data.

The postverbal selection of subjects was also observed in the B-test (another task testing interrogative sentences). The results obtained from the B-test are summarized in table 4.31. Table 4.31. presents the selection of preverbal and postverbal subjects of the three groups of participants in the B-test, according to the pronominal or lexical nature of the subject. I will focus only on the cells in gray, i.e., on the postverbal selection of subjects.

Table 4.31.: Cross-tabulation of speakers from El Cibao, Santo Domingo, and bilingual with regard to postverbal pronominal and lexical subjects in interrogatives – B-test (N = 1818)

B-test		**Null**	**Preverbal**	**Postverbal**	**Total pron/lex**
El Cibao	**Null**	N = 149 100.0%	N = 0 0.0%	N = 0 0.0%	N = 149 100.0%
	Pronominal	N = 0 0.0%	N = 144 39.5%	N = 221 60.5%	N = 365 100.0%
	Lexical DP	N = 0 0.0%	N = 24 51.1%	N = 23 48.9%	N = 47 100.0%
	Total position	N = 149 26.6%	N = 168 29.9%	N = 244 43.5%	N = 561 100.0%
Santo Domingo	**Null**	N = 174 100.0%	N = 0 0.0%	N = 0 0.0%	N = 174 100.0%
	Pronominal	N = 0 0.0%	N = 191 57.0%	N = 144 43.0%	N = 335 100.0%
	Lexical DP	N = 0 0.0%	N = 26 49.1%	N = 27 50.9%	N = 53 100.0%
	Total position	N = 174 31.0%	N = 217 38.6%	N = 171 30.4%	N = 562 100.0%
Bilingual	**Null**	N = 261 100.0%	N = 0 0.0%	N = 0 0.0%	N = 261 100.0%
	Pronominal	N = 0 0.0%	N = 202 52.9%	N = 180 47.1%	N = 382 100.0%
	Lexical DP	N = 0 0.0%	N = 23 44.2%	N = 29 55.8%	N = 52 100.0%
	Total position	N = 261 37.5%	N = 225 32.4%	N = 209 30.1%	N = 695 100.0%

El Cibao: Chi-square: *564.166* *p=<.000>*
Santo Domingo: Chi-square: *563.703* *p=<.000>*
Bilingual: Chi-square: *697.196* *p=<.000>*

As shown in the gray cells in table 4.31., in the B-test the selection of postverbal subjects seems to be affected by the nature of the subjects. However, the nature of the subjects is statistically affected. Only pronominal subjects are statistically significant (*p* value is of .000), but not lexical ones (*p* value is of .780). The participants from El Cibao show a higher preference for postverbal pronominal subjects (60.5%) than for lexical ones (48.9%). But this is not the case of the Santo Domingo and bilingual groups. The

speakers from Santo Domingo show a higher preference for postverbal lexical subjects (50.9%) than for pronominal ones (43.0%). The bilingual group also shows a higher preference for postverbal lexical subjects (55.8%) than for pronominal ones (47.1%). The three groups of participants are statistically significant (*p* value is of .000). However, I will refer to the postverbal selection of pronominal subjects to address my hypothesis, since only pronominal subjects are statistically significant. The data in table 4.31. show that my hypothesis is not completely confirmed, since only the Santo Domingo participants selected a lower percentage of postverbal pronominal subjects than the bilingual group. But this is not the case of the El Cibao group. El Cibao participants selected a higher percentage of postverbal pronominal subjects than the bilingual group.

The postverbal selection of subjects in declarative sentences is presented in table 4.32. It cross-tabulates the three groups of participants (El Cibao, Santo Domingo, and bilingual) in regard to postverbal pronominal and lexical subjects in the C-test (declarative sentences).

Table 4.32.: Cross-tabulation of speakers from El Cibao, Santo Domingo, and bilingual with regard to post-verbal pronominal and lexical subjects in declaratives – C-test (N = 1940)

C-test		**Null**	**Preverbal**	**Postverbal**	**Total pron/lex**
El Cibao	**Null**	N = 205 100.0%	N = 0 0.0%	N = 0 0.0%	N = 205 100.0%
	Pronominal	N = 0 0.0%	N = 199 55.4%	N = 160 44.6%	N = 359 100.0%
	Lexical DP	N = 0 0.0%	N = 36 61.0%	N = 23 39.0%	N = 59 100.0%
	Total position	N = 205 32.9%	N = 235 37.7%	N = 183 29.4%	N = 623 100.0%
Santo Domingo	**Null**	N = 212 100.0%	N = 0 0.0%	N = 0 0.0%	N = 212 100.0%
	Pronominal	N = 0 0.0%	N = 262 76.4%	N = 81 23.6%	N = 343 100.0%
	Lexical DP	N = 0 0.0%	N = 57 87.7%	N = 8 12.3%	N = 65 100.0%
	Total position	N = 212 34.2%	N = 319 51.5%	N = 89 14.4%	N = 620 100.0%
Bilingual	**Null**	N = 226 100.0%	N = 0 0.0%	N = 0 0.0%	N = 226 100.0%
	Pronominal	N = 0 0.0%	N = 349 87.3%	N = 51 12.7%	N = 400 100.0%
	Lexical DP	N = 0 0.0%	N = 60 84.5%	N = 11 15.5%	N = 71 100.0%
	Total position	N = 226 32.4%	N = 409 58.7%	N = 62 8.9%	N = 697 100.0%

El Cibao: Chi-square: *623.957* *p=<.000>*
Santo Domingo: Chi-square: *626.225* *p=<.000>*
Bilingual: Chi-square: *697.587* *p=<.000>*

The three groups of participants (El Cibao, Santo Domingo, and bilingual) and the nature of the subject (pronominal or lexical) are statistically significant variables (*p* value is of .000). As observed in the shaded cells in table 4.32., El Cibao group presents a higher percentage of postverbal pronominal and lexical subjects (44.6% and 39.0%, respectively) than the other two groups of participants. Out of the other two groups of participants, the Santo Domingo group presents a higher percentage of postverbal

pronominal subjects (23.6%) than the bilingual group (12.8%). But the bilingual group selected a slightly higher percentage of postverbal lexical subjects (15.5%) than the Santo Domingo group.

The hypothesis is partially confirmed in these three tasks. Only the group from El Cibao shows a tendency to have a higher percentage of postverbal subjects (irrespective of the subject type, i.e. either pronominal or lexical) than the bilingual group. However, in the B-test, the bilingual group has a higher percentage of postverbal lexical subjects than the El Cibao group. The Santo Domingo participants do not show this pattern. Specifically, they only show a higher percentage of postverbal pronominal subjects than the bilingual group in the C-test. Therefore, this tendency suggests that the [+ strong] nominal features in Agr can be found in the three groups of DS participants, in both interrogative and declarative sentences, with pronominal and lexical subjects. But, in these three tasks, the only clear-cut tendency is observed among the El Cibao participants. The El Cibao group reflects the highest percentages in the selection of postverbal pronominal and lexical subjects. Oppositely, the other two groups do not show this clear tendency.

In sum, my hypothesis cannot be completely confirmed, since only the participants from El Cibao show a higher percentage of postverbal subjects (i.e., [+ strong] verbal features in T) than the bilingual group in the three GJ tasks (A-test, B-test, and C-test). The results observed among the El Cibao participants (similar in the three tasks) may indicate that they select postverbal subjects regardless of their pragmatic and discursive value. The other two groups (Santo Domingo and bilinguals) may be affected by other factors, such as the nature of the task.

Another variable that can affect the postverbal position of subjects is the function of the wh-phrase before its extraction, which my fifteenth hypothesis addresses. In this hypothesis I suggested that if the monolingual DS speakers (in El Cibao, Santo Domingo) are more sensitive to the subject position according to the function of the wh-phrase than the bilingual speakers, I expect to find that the monolingual group will have a higher percentage of postverbal subjects with wh-argumental interrogatives than the bilingual group. In order to prove this hypothesis, the following tables (4.33. and 4.34.) provide the results from the A-test and the B-test, according to the function of the wh-phrase. Table 4.33. presents a cross-tabulation of the three groups of participants (El Cibao, Santo Domingo, and bilinguals) with regard to postverbal subjects with wh-argument and wh-adjunct phrases in the A-test.

Table 4.33.: Cross-tabulation of speakers from El Cibao, Santo Domingo, and bilinguals with regard to postverbal subjects with wh-argument and wh- adjunct phrases – A-test. (N = 1115)

A-test		**El Cibao**	**Santo Domingo**	**Bilingual**	**Total position**
Wh-adjunct	**Preverbal**	N = 66 36.5%	N = 106 58.9%	N = 108 54.0%	N = 280 49.9%
	Postverbal	N = 115 63.5%	N = 74 41.1%	N = 92 46.0%	N = 281 50.1%
	Total per origin	N = 181 100.0%	N = 180 100.0%	N = 200 100.0%	N = 561 100.0%
Wh-argument	**Preverbal**	N = 78 43.1%	N = 98 54.4%	N = 82 42.5%	N = 258 46.6%
	Postverbal	N = 103 56.9%	N = 82 45.6%	N = 111 57.5%	N = 296 53.4%
	Total per origin	N = 181 100.0%	N = 180 100.0%	N = 193 100.0%	N = 554 100.0%

El Cibao: Chi-square: *1.661* *p=<.198>*
Santo Domingo: Chi-square: *.724* *p=<.395>*
Bilingual: Chi-square: *5.213* *p=<.022>*

In the shaded cells in table 4.33., the participants from Santo Domingo and the bilingual ones show a similar preference in the selection of postverbal subjects with regard to the function of the wh-phrase in the A-test. Both groups have a higher percentage of postverbal subjects with wh-argumental sentences (45.6% and 57.5%, respectively) than with wh-adjunct ones (41.1% and 46.0%, respectively). Unlike these two groups, the participants from El Cibao show a higher percentage of postverbal subjects with wh-adjunct sentences (63.5%) than with wh-argumental ones (56.9%). In the A-test, my hypothesis is not confirmed since the two monolingual groups show a lower percentage of postverbal subjects with wh-argumental sentences (56.9% and 45.6%) than the bilingual group does (57.5%). Statistically, the two types of wh-interrogative sentences (wh-adjunct and wh-argumental) are significant (*p* value is of .000 and .036, respectively). On the other hand, only the bilingual group shows statistically significant results (*p* value is of .022), but not the groups from El Cibao (*p* value is of .198) or Santo Domingo (*p* value is of .395).

The results obtained in the B-test are summarized in table 4.34. Table 4.34. shows a cross-tabulation of speakers from El Cibao, Santo Domingo, and bilinguals with regard to the position of subjects with wh-argument and wh- adjunct phrases in the B-test. I will refer only to the cells in gray, which represent the postverbal selection of subjects. Table 4.34. presents the selection of subjects according to the type of wh-interrogative sentences (wh-adjunct and wh-argument) in the B-test.

Table 4.34.: Cross-tabulation of speakers from El Cibao, Santo Domingo, and bilinguals with regard to postverbal subjects with wh-argument and wh- adjunct phrases – B-test (N = 1242).

B-test		**El Cibao**	**Santo Domingo**	**Bilingual**	**Total**
Wh-adjunct	**Null**	N = 52 28.7%	N = 57 31.5%	N = 95 40.6%	N = 204 34.2%
	Preverbal	N = 71 39.2%	N = 83 45.9%	N = 71 30.3%	N = 225 37.8%
	Postverbal	N = 58 32.1%	N = 41 22.7%	N = 68 29.1%	N = 167 28.0%
	Total per origin	N = 181 100.0%	N = 181 100.0%	N = 234 100.0%	N = 596 100.0%
Wh-argument	**Null**	N = 46 23.0%	N= 60 30.0%	N = 90 36.6%	N = 196 30.3%
	Preverbal	N = 43 21.5%	N = 51 25.5%	N = 63 25.6%	N = 157 24.3%
	Postverbal	N = 111 55.5%	N = 89 44.5%	N = 93 37.8%	N = 293 45.4%
	Total per origin	N = 200 100.0%	N = 200 100.0%	N = 246 100.0%	N = 646 100.0%

El Cibao: Chi-square: *22.975* *p=<.000>*
Santo Domingo: Chi-square: *24.555* *p=<.000>*
Bilingual: Chi-square: *4.197* *p=<.123>*

As observed in the gray cells in table 4.34. in the B-test, in wh-adjunct sentences, the highest percentage of postverbal subjects is found among the El Cibao participants (32.1%), followed by the bilingual group (29.1%), and finally by the Santo Domingo participants (22.7%). With respect to the postverbal position in wh-argumental sentences, the highest percentage of postverbal subjects is found among the speakers from El Cibao (55.5%), followed by the other monolingual group (Santo Domingo) with a rate of 44.5%, and finally, the bilingual participants exhibit the lowest percentage of postverbal subjects (37.8%). Statistically, the two types of wh-sentences are significant (wh-adjunct: *p* value is of .006, and wh-argument: *p* value is of .004), as well as the two monolingual groups of participants (*p* value is of .000). But the bilingual group does not offer statistically significant data (*p* value is of .123). Unlike in the A-test, in the B-test my

hypothesis is confirmed; i.e., the two monolingual groups (El Cibao and Santo Domingo) show a higher percentage of postverbal subjects with wh-argumental sentences (55.5% and 44.5%) than the bilingual group (37.8%). That is, in the B-test, the two monolingual groups of participants are sensitive to the constraints of the wh-phrase. This is not the case in the A-test. The different results in the A-test and B-test may be attributed to the nature of the task. In the A-test, only preverbal and postverbal subjects were available (but no null ones), whereas in the B-test, the participants could also select null subjects.

4.2.5.3.3. Expletives (Social factors – Origin)

The third *pro*-drop property analyzed refers to the use of expletives. Null subject languages tend to show null expletives, whereas non-null subject languages require the overt expression of expletives. In order to address this property, I proposed that if monolingual DS speakers show a higher tendency to adopt the [+ strong] nominal features in T than bilinguals, even with expletive subjects, then I expect to find that the bilingual group will show a higher percentage of overt expletives in all sentence types than the other two monolingual groups. In table 4.35., I present the cross-tabulation of speakers from El Cibao, Santo Domingo, and bilinguals with regard to overt expletives (cells in gray) in interrogative and declarative sentences (B-test and C-test). No generalization can be established due to the low number of items in table 4.35., but some explanations are afforded.

Table 4.35.: Cross-tabulation of speakers from El Cibao, Santo Domingo, and bilinguals with regard to overt expletives in interrogative and declarative sentences– B-test and C-test (N = 307)

Expletives		**El Cibao**	**Santo Domingo**	**Bilingual**	**Total**
B-test (interrogatives)	**Null**	N = 37 60.7%	N = 51 82.3%	N = 57 93.4%	N = 145 78.8%
	Overt	N = 24 39.3%	N = 11 17.7%	N = 4 6.6%	N = 39 21.2%
	Total per origin	N = 61 100.0%	N = 62 100.0%	N = 61 100.0%	N = 184 100.0%
C-test (declaratives)	**Null**	N = 32 78.0%	N = 37 92.5%	N = 37 88.1%	N = 106 86.2%
	Overt	N = 9 22.0%	N = 3 7.5%	N = 5 11.9%	N = 17 13.8%
	Total per origin	N = 41 100.0%	N = 40 100.0%	N = 42 100.0%	N = 123 100.0%

El Cibao: Chi-square: *3.389* *p=<.066>*
Santo Domingo: Chi-square: *2.154* *p=<.142>*
Bilingual: Chi-square: *.892* *p=<.345>*

The gray cells in table 4.35. show the selection of overt expletives in two different GJ tasks (B-test and C-test). Although the number of items per group is low, the results reported in table 4.35. reflect the tendency of each group. As indicated in the gray cells of the B-test and the C-test, the highest percentage of overt expletives is found in the group from El Cibao (39.3% and 22.0%). This group of participants is the only statistically significant one (*p* value is of .066), although it is slightly above the accepted level of significance set for this study. However, the Santo Domingo and the bilingual groups are not statistically significant (*p* value is of .142, and .345, respectively). In regard to the task, in interrogative sentences (B-test), the highest percentage of overt expletives is found among El Cibao participants (39.3%), followed by the other monolingual group (Santo Domingo) with a rate of 17.7%, and finally by the bilingual group (6.6%). On the other hand, in declarative sentences, the speakers from El Cibao also selected the highest percentage of overt expletives (22.0%), followed by the bilingual participants (11.9%),

and, finally, the Santo Domingo participants selected 7.5% overt expletives. It must be noted that the two GJ tasks show different statistical significance. The B-test is statistically significant (*p* value is of .000), but the C-test is not.

The two monolingual groups have a higher percentage of overt expletives in interrogative sentences (B-test) than in declarative ones (C-test). On the other hand, the bilingual participants show a higher selection of overt expletives in declarative sentences than in interrogative ones. But it should be noted that the B-test is the only task with statistical significance (*p* value is of .000). In this task (B-test), the two monolingual groups selected a higher percentage of overt expletives than the bilingual group.

The data in table 4.35. do not confirm my hypothesis, since the selection of overt expletives is not always higher among the bilingual participants than among the monolingual ones. Furthermore, the number of items analyzed is low, and the *p* values of the groups are high (especially the bilingual and Santo Domingo groups). This lack of statistical significance suggests that some other variables may be affecting the selection of expletives.

4.2.5.3.4. *That*-trace filter (Social factors – Origin)

In regard to the last *pro*-drop property, i.e., the violation of the *that*-trace filter, I proposed that if monolingual speakers respect the *that*-trace filter more than bilinguals, I expect to find that the monolingual participants will show a higher percentage of constructions with a null complementizer than the bilingual group. In order to prove that, table 4.36. presents a cross-tabulation of speakers from El Cibao, Santo Domingo, and bilinguals with regard to null complementizers in *that*-trace constructions in the two GJ

tasks testing interrogative sentences (A-test and B-test). The number of items analyzing this construction is low, therefore the numbers in the following table will also be low.

Table 4.36.: Cross-tabulation of speakers from El Cibao, Santo Domingo and bilinguals with regard to null complementizers in that trace constructions in interrogatives –A-test and B-test (N = 489)

Null complementizers		**El Cibao**	**Santo Domingo**	**Bilingual**	**Total**
A-test (interrogatives)	**Accept Null compl.**	N = 65 81.3%	N = 45 56.3%	N = 54 65.1%	N = 164 67.5%
	NOT accept Null compl.	N = 15 18.8%	N = 35 43.8%	N = 29 34.9%	N = 79 32.5%
	Total per origin	N = 80 100.0%	N = 80 100.0%	N = 83 100.0%	N = 243 100.0%
B-test (interrogatives)	**Accept Null compl.**	N = 64 80.0%	N = 59 73.8%	N = 63 73.3%	N = 186 75.6%
	NOT accept Null compl.	N = 16 20.0%	N = 21 26.3%	N = 23 26.7%	N = 60 24.4%
	Total per origin	N = 80 100.0%	N = 80 100.0%	N = 86 100.0%	N = 246 100.0%

El Cibao: Chi-square: *.040* *p=<.841>*
Santo Domingo: Chi-square: *5.385* *p=<.020>*
Bilingual: Chi-square: *1.332* *p=<.248>*

Table 4.36. illustrates that the number of items testing the participants' competence in *that*-trace structures is low. Despite that, an explanation regarding the tendencies in the selection of null complementizers is observed, as explained below. The shaded cells in table 4.36. indicate the selection of null complementizers. Out of the total amount of sentences testing *that*-trace constructions, the participants from El Cibao show the highest percentage of acceptance of null complementizers in the A-test and B-test (81.3% and 80.0%, respectively) among all the participants in the study. In the A-test, the highest acceptance is found among El Cibao participants (81.3%), followed by the bilingual group (65.1%), and the participants from Santo Domingo have the lowest acceptance of constructions with null complementizers (56.3%). In the B-test, the highest acceptance of

null complementizers is also found among El Cibao participants (80.0%), followed by the Santo Domingo participants (73.8%), and the lowest acceptance of null complementizers is found among the bilingual speakers (73.3%). But in table 4.36., only the A-test can be considered statistically significant (*p* value is of .003), whereas the B-test is not. With respect to the statistical significance of the three groups of participants, the only statistically significant group is the Santo Domingo one (*p* value is of .020), whereas the groups from El Cibao and the bilingual one are not statistically significant. An observation of the gray cells per group shows that the El Cibao group has a very similar percentage of null complementizers in both tasks (A-test: 81.3% and B-test: 80.0%), whereas the Santo Domingo and the bilingual group do not. These latter groups selected a higher percentage of constructions with null complementizers in the B-test than in the A-test, which is the statistically significant test.

The percentages observed in table 4.36. demonstrate that my hypothesis is partially confirmed, since it is only confirmed in the B-test. In the B-test, the two monolingual groups selected a higher percentage of constructions with a null complementizer than the bilingual group. However, since not all the variables in table 4.36. are statistically significant, further examination of the *that*-trace filter is suggested. This lack of significance may be due to the low rate of samples analyzed, as observed in the numbers (N) in table 4.36.

4.2.5.4. Social factors – Patterns of language use-: Results from the GJs (A-test, B-test, and C-test) by the bilingual group

In this section I refer only to the bilingual participants. The main goal of this section is addressing the effect that the different patterns of language use have over the four *pro*-drop properties. In this study, three sub-factors compose what I refer as 'patterns of language use.' These three sub-factors are: language spoken at home, language comfort level, and language contact.

4.2.5.4.1. Social factors – Patterns of language use (Language at home and language comfort level)

In hypothesis eighteen (as presented in chapter 1), I address the influence that the bilingual's patterns of language use (language spoken at home and language preference) may have on the production and acceptance of subjects. Specifically, I suggested that if the patterns of language use affect the acceptance and production of overt, postverbal, and expletive subjects, then I would expect that those speakers who speak English at home and prefer speaking in English over Spanish would select a higher frequency of overt subjects (even expletive ones) than null ones, and less postverbal subjects than those speakers who prefer Spanish. Tables 4.37. and 4.38. refer to these two sub factors of the patterns of language use. Table 4.37. presents the data in reference to the language spoken at home, and table 4.38. exhibits the data in regard to the language comfort level, i.e. their language preference. Specifically, table 4.37. presents a cross-tabulation of the bilingual speakers' data with regard to overt subjects according to the language spoken at home in interrogative and declarative sentences (B-test, and C-test). The gray cells in

table 4.37. illustrate the overt subjects selected (excluding the use of expletive subjects) in two of the GJ tasks (B-test and C-test).

Table 4.37.: Cross-tabulation of bilingual speakers' data with regard to overt subjects according to language spoken at home in interrogative and declarative sentences –B-test and C-test (N = 1392)

		B-Test	**C-Test**	**Total per null/overt**
Language spoken at home: Spanish	**Null**	N = 105 37.0%	N = 91 29.1%	N = 196 32.8%
	Overt	N = 179 63.0%	N = 222 70.9%	N = 401 67.2%
	Total per task	N = 284 47.6%	N = 313 52.4%	N = 597 100.0%
Language spoken at home: Spanish and English	**Null**	N = 156 38.0%	N = 135 35.2%	N = 291 36.6%
	Overt	N = 255 62.0%	N = 249 64.8%	N = 504 63.4%
	Total per task	N = 411 51.7%	N = 384 48.3%	N = 795 100.0%

B-test: Chi-square: *.069* *p=<.792>*
C-test: Chi-square: *2.912* *p=<.088>*

As observed in the shaded cells in table 4.37., in interrogative sentences (B-test), the language spoken at home does not seem to influence the preference for the overt expression of subjects. That is, bilingual participants (irrespective of the language they self- reported using at home) have similar percentages of overt subjects. For instance, those bilingual participants who self-reported speaking Spanish at home selected 63.0% overt subjects in the B-test, and those who reported using both Spanish and English at home preferred 62.0% overt subjects. However, the B-test is not statistically significant. On the other hand, in the C-test, those participants who reported conversing only in Spanish at home selected 70.9% overt subjects, whereas those who reported speaking both languages (Spanish and English) selected 64.8% overt subjects. Statistically, the C-test has a *p* value of .088, which is over the level of acceptance. With regard to the

language spoken at home, the participants who reported talking only in Spanish at home present statistically significant data (*p* value is of .040), but not those speakers who speak both Spanish and English. Those speakers who reported that they speak Spanish at home present a slightly higher percentage of overt subjects in both tasks than those speakers who reported talking in Spanish and English. These results do not support my hypothesis, since the bilingual speakers who self-reported speaking Spanish at home selected more overt subjects than the group who also speaks English at home. These data suggest that English may not be influencing their choice of overt versus null subjects. Consequently, the [- strong] nominal values in Agr (found in English) are not affecting the bilingual DS speakers who reported speaking in Spanish and English at home.

The participants' competence in overt or null subjects is also analyzed according to the language they reported feeling more comfortable using, i.e., their language preference. These results are represented in table 4.38. The cells in gray present the overt selection of subjects in the B-test and C-test, according to the participants' language preference.

Table 4.38.: Cross-tabulation of bilingual speakers' data with regard to overt subjects according to language preference in interrogative and declarative sentences –B-test and C-test (N = 1392)

		B-Test	**C-Test**	**Total per overt/null**
Language preference: Spanish	**Null**	N = 45 46.9%	N = 37 33.3%	N = 82 39.6%
	Overt	N = 51 53.1%	N = 74 66.7%	N = 125 60.4%
	Total per task	N = 96 46.4%	N = 111 53.6%	N = 207 100.0%
Language preference: English	**Null**	N = 101 48.6%	N = 82 43.9%	N = 183 46.3%
	Overt	N = 107 51.4%	N = 105 56.1%	N = 212 53.7%
	Total per task	N = 208 52.7%	N = 187 47.3%	N = 395 100.0%
Language preference: Spanish and English	**Null**	N = 115 29.4%	N = 107 26.8%	N = 222 28.1%
	Overt	N = 276 70.6%	N = 292 73.2%	N = 568 71.9%
	Total per task	N = 391 49.5%	N = 399 50.5%	N = 790 100.0%

B-test: Chi-square: *25.350* *p=<.000>*
C-test: Chi-square: *16.909* *p=<.000>*

According to the language preference of the speakers (as self-reported by them), the results in table 4.38. (the gray cells) demonstrate that in both tasks the highest percentage of overt subjects is selected by the group who prefer speaking Spanish and English. But only one of the three groups is statistically significant, and the other two groups are not. Specifically, the group that prefers speaking only in Spanish is the most statistically significant one (*p* value is of .047); and the participants who reported a preference for speaking in both languages (Spanish and English), or the ones who self-reported being more comfortable using only English are not statistically significant (*p* value is of .417 and *p* value is of .349, respectively). On the other hand, the two tasks analyzed in table 4.38. (B-test and C-test) are statistically significant (*p* value is of .000). In the B-test, the

participants who reported that they preferred speaking in Spanish and English present a rate of 70.6% overt subjects, whereas the participants who reported being more comfortable speaking in English present the lowest percentage of overt subjects (51.4%). In the C-test, the results show that the participants who prefer speaking Spanish and English present the highest percentage of overt subjects (73.2%), whereas the lowest percentage of overt subjects is found among those participants who prefer speaking in English (56.1%). In both tasks (B-test and C-test), those participants who reported a preference to speak only Spanish are in-between the other two groups in the selection of overt subjects. After analyzing these results, it can be concluded that the hypothesis is partially confirmed. That is, the highest percentages of overt subjects are found among the participants who reported feeling equally comfortable using both Spanish and English, but the lowest percentages of overt subjects are found among those speakers who prefer using only English (a language that has an almost categorical use of overt subjects). Furthermore, the low statistical significance of the two groups who reported feeling comfortable in English (i.e., the group who is comfortable only in English, or the one who is comfortable in both Spanish and English) suggests that some other variables may be affecting their competence in overt and null subjects. These results suggest that contact with other language varieties (English or diverse Spanish varieties) does not seem to be affecting the overt selection of subjects in interrogative and declarative sentences.

With respect to the position of subjects, i.e., subject inversion, table 4.39. shows a cross-tabulation of the bilingual speakers' data with regard to postverbal subjects (cells in gray) in interrogative sentences (A-test and B-test) according to the language they speak at home. Although postverbal subjects are the only subjects addressed in my hypothesis

(shaded cells), table 4.39. presents all the possible answers in each test (two answers in the A-test, and three answers in the B-test), i.e., preverbal, postverbal, and null subjects. Null subjects are only an option in the B-test.

Table 4.39.: Cross-tabulation of bilingual speakers' data with regard to postverbal subjects according to language spoken at home in interrogative sentences -A-test and B-test (N = 1280)

		A-Test	**B-Test**	**Total**
Language spoken at home: Spanish	**Null**	-	N = 105 37.0%	N = 105 19.6%
	Preverbal	N = 112 45.0%	N = 102 36.0%	N = 214 40.2%
	Postverbal	N = 137 55.0%	N = 77 27.0%	N = 214 40.2%
	Total per task	N = 249 100.0%	N = 284 100.0%	N = 533 100.0%
Language spoken at home: Spanish and English	**Null**	-	N = 156 38.0%	N = 156 20.9%
	Preverbal	N = 193 57.4%	N = 123 30.0%	N = 316 42.3%
	Postverbal	N = 143 42.6%	N = 132 32.0%	N = 275 36.8%
	Total per task	N = 336 100.0%	N = 411 100.0%	N = 747 100.0%

A-test: Chi-square: *8.898* *p=<.003>*
B-test: Chi-square: *3.302* *p=<.192>*

As observed in the shaded cells in table 4.39., in the A-test, the highest percentage of postverbal subjects is found among those participants who reported speaking Spanish at home (55.0%). Unlike in the A-test, in the B-test, the highest percentage of postverbal subjects is found among those speakers who self-reported speaking Spanish and English at home (32.0%). But it is worth noting that, although both groups of bilingual participants (those who speak only Spanish at home, or those who speak Spanish and English) are statistically significant (in both cases *p* value is of .000), only the A-test is statistically significant (*p* value is of .003), but not the B-test. Therefore, only the A-test

should be considered to confirm or reject my hypothesis. According to the results in the A-test, speaking in Spanish and English at home seems to influence the percentage of postverbal subjects in interrogative sentences. As observed, they selected a lower percentage of postverbal subjects than those speakers who reported speaking only in Spanish. In table 4.40., I present the postverbal selection of subjects in declarative sentences according to the language used at home.

Table 4.40.: Cross-tabulation of bilingual speakers' data with regard to postverbal subjects according to language spoken at home in declarative sentences- C-test (N = 697)

		C-Test
Language spoken at home: Spanish	**Null**	N = 91 29.1%
	Preverbal	N = 187 59.7%
	Postverbal	N = 35 11.2%
	Total per task	N = 313 100.0%
Language spoken at home: Spanish and English	**Null**	N = 135 35.2%
	Preverbal	N = 222 57.8%
	Postverbal	N = 27 7.0%
	Total per task	N = 384 100.0%

Chi-square: *5.418* *p=<.067>*

The numbers in table 4.40. are low to make generalizations, but an observation is made. As indicated in the gray cells in table 4.40., the participants who reported speaking only Spanish at home show a higher percentage of postverbal subjects (11.2%) than those who reported speaking both Spanish and English at home (7.0%). Therefore, speaking English and Spanish at home seems to influence the position of subjects, since they show slightly lower percentages of postverbal subjects than those speakers who speak only Spanish at home. One may suggest that, in their competence of declarative sentences, the bilingual

participants who speak only Spanish at home have available to them the [+ strong] verbal features in T. But the bilingual participants who speak Spanish and English at home may be losing the acceptance of the [+ strong] verbal values in T.

According to the language preference, table 4.41. presents a cross-tabulation of the bilingual speakers' data with regard to postverbal subjects (marked in the gray cells) according to language preference in interrogative sentences (A-test and B-test).

Table 4.41.: Cross-tabulation of bilingual speakers' data with regard to postverbal subjects according to language preference in interrogative sentences -A-test and B-test (N = 1280)

		A-Test	**B-Test**	**Total position**
Language preference: Spanish	**Null**	-	N = 45 46.9%	N = 45 25.4%
	Preverbal	N = 35 43.2%	N = 36 37.5%	N = 71 40.1%
	Postverbal	N = 46 56.8%	N = 15 15.6%	N = 61 34.5%
	Total per task	N = 81 100.0%	N = 96 100.0%	N = 177 100.0%
Language preference: English	**Null**	-	N = 101 48.6%	N = 101 28.4%
	Preverbal	N = 95 64.2%	N = 59 28.4%	N = 154 43.2%
	Postverbal	N = 53 35.8%	N = 48 23.0%	N = 101 28.4%
	Total per task	N = 148 100.0%	N = 208 100.0%	N = 356 100.0%
Language preference: Spanish and English	**Null**	-	N = 115 29.4%	N = 115 15.4%
	Preverbal	N = 175 49.2%	N = 130 33.3%	N = 305 40.8%
	Postverbal	N = 181 50.8%	N = 146 37.3%	N = 327 43.8%
	Total per task	N = 356 100.0%	N = 391 100.0%	N = 747 100.0%

A-test: Chi-square: 12.468 *p*=<.002>
B-test: Chi-square: 34.650 *p*=<.000>

The postverbal selection of subjects in the A-test and B-test by the bilingual group of speakers is indicated in the gray cells of table 4.41. The results from both tasks show a

marked variation. Nonetheless, the A-test and the B-test are statistically significant (*p* value is of .002 and *p* value is of .000, respectively). In the A-test, the highest percentage of postverbal subjects is found among the participants who self-reported a preference to speak in Spanish (56.8%), whereas the lowest percentage is found among those who preferred speaking in English (35.8%). On the other hand, in the B-test, the highest percentage of postverbal subjects is found among those speakers who self-reported a preference to speak in both Spanish and English (37.3%), whereas the lowest percentage of postverbal subjects are selected by those speakers who preferred speaking only in Spanish (15.6%). Statistically, the three groups of bilingual speakers according to their language comfort level are equally significant; since the three of them have *p* value is of .000. In the two interrogative GJ tasks, the preferred language does not correlate with the selection of postverbal subjects. In the A-test, where the only two possible answers were preverbal or postverbal subjects, the participants who preferred Spanish produced the highest percentage of postverbal subjects. These latter participants were followed by those participants who reported a preference for speaking both languages (Spanish and English); and finally the lowest percentage of postverbal subjects is found among the bilingual participants who felt comfortable speaking only in English. Therefore, the A-test confirms my hypothesis. But, the B-test does not confirm my hypothesis, since those participants who reported being more comfortable speaking in English (either English only, or English and Spanish) selected more postverbal subjects than the participants who feel comfortable only in Spanish. This difference may be explained by the nature of the tasks, i.e. the A-test does not have null subjects as a possible option, whereas the B-test has three possible answers to choose from: preverbal, postverbal, and null subjects.

Table 4.42. presents the results obtained in the GJ task testing declarative sentences (C-test), in regard to the postverbal position of subjects, as marked in the gray cells.

Table 4.42.: Cross-tabulation of bilingual speakers' data with regard to postverbal subjects according to language spoken at home and language preference in interrogatives – C-test (N = 697)

		C-Test
Language preference: Spanish	**Null**	N = 37 33.3%
	Preverbal	N = 66 59.5%
	Postverbal	N = 8 7.2%
	Total per task	N = 111 100.0%
Language preference: English	**Null**	N = 82 43.9%
	Preverbal	N = 91 48.7%
	Postverbal	N = 14 7.5%
	Total per task	N = 187 100.0%
Language preference: Spanish and English	**Null**	N = 107 26.8%
	Preverbal	N = 252 63.2%
	Postverbal	N = 40 10.0%
	Total per task	N = 399 100.0%

Chi-square: *17.344* *p=<.002>*

Numbers in table 4.42. are low to draw a generalization. However, an explanation is provided. As illustrated in the gray cells in table 4.42., the preferred language of the participants does not seem to affect the postverbal position of subjects. Therefore, all the participants, regardless of their preferred language (Spanish, English, or Spanish and

English), show very similar percentages of postverbal subjects (7.2%, 7.5%, and 10.0%, respectively).

It can be concluded that neither the language spoken at home, nor the preferred language of the participants, seems to influence the overt versus null selection of subjects, or the subject-verb inversion property. Consequently, my hypothesis cannot be confirmed.

The last aspect of the eighteenth hypothesis is related to the acceptance of overt expletives according to some patterns of language use by the bilingual speakers. Specifically, the two patterns of language use addressed in this hypothesis are the language spoken at home (Spanish or English), and the language they reported feeling more comfortable using (Spanish, English, or Spanish and English). The following two tables (4.43. and 4.44.) illustrate the results obtained in regard to these two variables. The next table (table 4.43.) cross-tabulates the selection of overt and null expletives in the B-test and C-test, i.e., in interrogative and declarative sentences.

Table 4.43.: Cross-tabulation of bilingual speakers' data with regard to overt expletive subjects according to language at home in interrogative and declarative sentences -B-test and C-test (N = 103)

Expletives		**B-Test**	**C-Test**	**Total per overt/null**
Language spoken at home: Spanish	**Null**	N = 25 92.6%	N = 15 83.3%	N = 40 88.9%
	Overt	N = 2 7.4%	N = 3 16.7%	N = 5 11.1%
	Total per task	N = 27 100.0%	N = 18 100.0%	N = 45 100.0%
Language spoken at home: Spanish and English	**Null**	N = 32 94.1%	N = 22 91.7%	N = 54 93.1%
	Overt	N = 2 5.9%	N = 2 8.3%	N = 4 6.9%
	Total per task	N = 34 100.0%	N = 24 100.0%	N = 58 100.0%

B-test: Chi-square: *.057* *p=<.811>*
C-test: Chi-square: *.681* *p=<.409>*

The number of expletive subjects is low, as observed in table 4.43. Consequently, no generalizations can be made, although general tendencies can be observed. In general, the bilingual group who self-reported speaking only in Spanish at home has a higher percentage of overt expletives in the B-test and C-test (7.4. and 16.7%, respectively) than the participants who reported speaking in both Spanish and English at home (5.9% and 8.3%). But none of the two bilingual groups (according to the language spoken at home: Spanish, or Spanish and English) is statistically significant. As observed in the gray cells in table 4.43., the type of structure (interrogative and declarative) examined in each task influences the overt selection of expletives in both groups: the C-test (declarative sentences) has a higher percentage of overt expletives than the B-test (interrogative sentences).

These results suggest that null expletive subjects are more easily accepted in declarative sentences than in interrogative ones. But, as observed under table 4.43., the

two tasks have a high *p* value; i.e., none of these two tasks is statistically significant. Consequently, my hypothesis cannot be confirmed due to the lack of statistical significance in both tasks, and because the participants who reported speaking in Spanish and English at home do not have a higher percentage of overt expletives than those who only speak in Spanish at home. The lack of statistical significance may be due to the low number of items being analyzed in the study. That is, the low number of items placed in the GJ tasks to test the expletive property may also explain the lack of statistical significance.

The following table (table 4.44.) presents the acceptance of overt expletives in interrogative and declarative sentences according to the language the participants self-reported feeling more comfortable using.

Table 4.44.: Cross-tabulation of bilingual speakers' data with regard to overt expletive subjects according to language preference in interrogative and declarative sentences -B-test and C-test (N = 103)

Expletives		**B-Test**	**C-Test**	**Total per overt/null**
Language preference: Spanish	**Null**	N = 8 88.9%	N = 5 83.3%	N = 13 86.7%
	Overt	N = 1 11.1%	N = 1 16.7%	N = 2 13.3%
	Total per task	N = 9 100.0%	N = 6 100.0%	N = 15 100.0%
Language preference: English	**Null**	N = 15 100.0%	N = 10 100.0%	N = 25 100.0%
	Overt	N = 0 0.0%	N = 0 0.0%	N = 0 0.0%
	Total per task	N = 15 100.0%	N = 10 100.0%	N = 25 100.0%
Language preference: Spanish and English	**Null**	N = 34 91.9%	N = 22 84.6%	N = 56 88.9%
	Overt	N = 3 8.1%	N = 4 15.4%	N = 7 11.1%
	Total per task	N = 37 100.0%	N = 26 100.0%	N = 63 100.0%

B-test: Chi-square: *1.502* *p=<.472>*
C-test: Chi-square: *1.781* *p=<.410>*

As observed in table 4.44., the number of items is very low. This low number of expletive subjects only provides an image of the general pattern followed by the bilingual participants, although no generalizations can be presented. The most important result observed in table 4.44. is the lack of overt expletives by those speakers who reported a preference to use only English (0.0%). On the other hand, the participants who preferred Spanish show a higher percentage of overt expletives in the B-test (11.1%) and in the C-test (16.7%) than the participants who prefer speaking in both Spanish and English (8.1% and 15.4%, respectively). However, neither of these two latter groups is statistically significant. These results disprove my hypothesis, since feeling comfortable speaking in English, or in Spanish and English cannot be related to having a higher acceptance of

overt expletives. According to the task, the selection of overt expletives is higher in the C-test than in the B-test. This is a similar pattern as the one observed in table 4.43., where the percentage of overt expletives was higher in declarative sentences than in interrogative ones.

As I suggested in the previous table, this difference in the two tasks may indicate that overt expletives are maintained longer in declarative sentences than in interrogative ones. Nonetheless, the B-test and the C-test are not statistically significant. The low statistical significance in the variables studied in table 4.44. indicate that further research is needed on this property. More data may provide statistically significant results to better (dis)confirm this hypothesis.

The acceptance of null complementizers according to the language spoken at home and the participants' language preference is also addressed in my nineteenth hypothesis. I proposed that if the language spoken at home and their language preference affect the acceptance of overt vs. null complementizers in *that*-trace constructions, then I would expect that those speakers who speak English at home and those who prefer speaking English over Spanish would accept more null complementizers in *that*-trace constructions than the ones who speak Spanish at home, and those who prefer speaking in Spanish. In order to prove this hypothesis, the following tables (4.45. and 4.46.) present the acceptance of constructions with null complementizers in the two GJ tasks testing interrogative sentences (A-test and B-test). Table 4.45. addresses the language spoken at home and the acceptance of null complementizers (gray cells).

Table 4.45.: Cross-tabulation of bilingual speakers' data with regard to null complementizers according to language spoken at home–A-test and B-test (N = 169)

		A-Test	B-Test	Total
Language spoken at home: Spanish	**Accept Null compl.**	N = 23 62.2%	N = 28 77.8%	N = 51 69.9%
	NOT accept Null compl.	N = 14 37.8%	N = 8 22.2%	N = 22 30.1%
	Total per task	N = 37 100.0%	N = 36 100.0%	N = 73 100.0%
Language spoken at home: Spanish and English	**Accept Null compl.**	N = 31 67.4%	N = 35 70.0%	N = 66 68.8%
	NOT accept Null compl.	N = 15 32.6%	N = 15 30.0%	N = 30 31.3%
	Total per task	N = 46 100.0%	N = 50 100.0%	N = 96 100.0%

A-test: Chi-square: *.247* *p=<.619>*
B-test: Chi-square: *.646* *p=<.421>*

Note that the results in table 4.45. can be explained, but no generalization can be drawn from the table, due to the low number of items testing the *that*-trace filter property. In the A-test, as observed in table 4.45., the highest acceptance of constructions with null complementizers is found among the speakers who reported speaking Spanish and English at home (67.4%). On the other hand, in the B-test, the highest percentage of acceptance is found among the participants who reported speaking Spanish at home (77.8%). Therefore, my hypothesis is partially confirmed; specifically, it is confirmed only in the A-test. In the A-test, the participants who speak Spanish and English at home have a higher acceptance of null complementizers in *that*-trace constructions than the participants who speak only Spanish at home. But neither the A-test nor the B-test is statistically significant. Due to the high *p* values of the variables in this table, further variables should be examined.

In reference to the participants' language preference, table 4.46. presents a cross-tabulation of the bilingual speakers' data with regard to null complementizers according

to their language preference. As mentioned in the last table, the number of items analyzing the *that*-trace construction is low. Therefore, the results presented in table 4.46. report a pattern found in the bilingual speakers of the study, but no generalizations can be extracted from these results.

Table 4.46.: Cross-tabulation of bilingual speakers' data with regard to null complementizers according to language preference –A-test and B-test (N = 169)

		A-Test	**B-Test**	**Total**
Language preference: Spanish	**Accept Null compl.**	N = 10 83.3%	N = 7 58.3%	N = 17 70.8%
	NOT accept Null compl.	N = 2 16.7%	N = 5 41.7%	N = 7 29.2%
	Total per task	N = 12 100.0%	N = 12 100.0%	N = 24 100.0%
Language preference: English	**Accept Null compl.**	N = 15 75.0%	N = 19 90.5%	N = 34 82.9%
	NOT accept Null compl.	N = 5 25.0%	N = 2 9.5%	N = 7 17.1%
	Total per task	N = 20 100.0%	N = 21 100.0%	N = 41 100.0%
Language preference: Spanish and English	**Accept Null compl.**	N = 29 56.9%	N = 37 69.8%	N = 66 63.5%
	NOT accept Null compl.	N = 22 43.1%	N = 16 30.2%	N = 38 36.5%
	Total per task	N = 51 100.0%	N = 53 100.0%	N = 104 100.0%

A-test: Chi-square: *4.140* *p=<.126>*
B-test: Chi-square: *4.863* *p=<.088>*

As observed in the gray cells in table 4.46., the highest percentage of acceptance of null complementizers in the A-test is found among the participants who reported a preference of speaking Spanish (83.3%), followed by those who preferred speaking in English (75.0%), and finally by those who preferred speaking in either Spanish or English (56.9%). On the other hand, in the B-test, the percentages are strikingly different. That is, the highest acceptance of null complementizers' constructions is found among those speakers who preferred using English (90.5%), followed by those who reported a

preference for Spanish and English (69.8%), and finally by those who preferred only Spanish (58.3%). However these results do not offer statistically significant data, since the three groups of bilingual speakers (according to their language preference) have high *p* values, i.e. they are not statistically significant.

Summing up, the only task that confirms my hypothesis is the B-test, where the preferred language seems to influence the acceptance of constructions with null complementizers. However, it must be noted that the *p* value in the B-test is slightly above the accepted level set in this study, although the A-test has less statistical significance. The different results in both tasks may be due to the number of possible answers to choose from. In the A-test, there are no null subjects as a possible answer but overt subjects (preverbal and postverbal). On the other hand, in the B-test, there are preverbal, postverbal, and null subjects as possible answers. The lack of statistical significance of the data in table 4.46. may be caused by the low number of items analyzed.

4.2.5.4.2. Social factors – Patterns of language use (Language contact)

In this section I observe the effect that language contact with other Spanish varieties (Caribbean varieties, or Caribbean and GS varieties) has over some of the *pro*-drop properties. In my twentieth hypothesis, I proposed that if the language contact that DS bilinguals have affected the preference of overt and null subjects, then I would expect that those bilingual speakers who have more contact with other Caribbean varieties would have more overt subjects (preverbal, postverbal, and expletives) than the speakers who have mainly contact with other GS varieties. In table 4.47., I present a cross-tabulation of

bilingual speakers' data with regard to overt subjects according to their contact with CS and GS – in interrogative and declarative sentences (B-test and C-test). In this table no expletives are considered. Table 4.48. presents the overt selection of subjects according to the language contact of the bilingual speakers.

Table 4.47.: Cross-tabulation of bilingual speakers' with regard to overt subjects according to language contact with CS and GS – in interrogative and declarative sentences -B-test and C-test- (N = 1392)

		B-Test	**C-Test**	**Total**
Language contact: Mainly Caribbean	**Null**	N = 151 42.9%	N = 121 35.7%	N = 272 39.4%
	Overt	N = 201 57.1%	N = 218 64.3%	N = 419 60.6%
	Total per task	N = 352 100.0%	N = 339 100.0%	N = 691 100.0%
Language contact: GS and Caribbean	**Null**	N = 110 32.1%	N = 105 29.3%	N = 215 30.7%
	Overt	N = 233 67.9%	N = 253 70.7%	N = 486 69.3%
	Total per task	N = 343 100.0%	N = 358 100.0%	N = 701 100.0%

B-test: Chi-square: *8.685* *p=<.003>*
C-test: Chi-square: *3.218* *p=<.073>*

As observed in the gray cells in table 4.47., in interrogative and declarative sentences (B-test and C-test), the highest percentages of overt subjects are found among the bilingual participants who have contact with both CS and GS varieties (67.9% and 70.7%, respectively). These results disconfirm my hypothesis, since having contact with GS (apart from the CS contact) does not reduce the percentage of overt subjects. However, only the group with CS contact can be considered statistically significant (*p* value is of .053). In regard to the task, the two groups of bilingual participants show a higher percentage of overt subjects in the C-test (declarative sentences) than in the B-test (interrogative ones), irrespective of their language contact. Therefore, in interrogative

sentences, the bilingual group accepts more null subjects than in declarative ones. Statistically, the B-test is more significant (*p* value is of .003) than the C-test.

The postverbal position of subjects in interrogative sentences according to the bilingual language contact with other Spanish varieties is presented in table 4.48.

Table 4.48.: Cross-tabulation of bilingual speakers' data with regard to postverbal subjects according to language preference in interrogative sentences -A-test and B-test (N = 1280)

		A-Test	**B-Test**	**Total position**
Language contact: Mainly Caribbean	**Null**	-	N = 151 42.9%	N = 151 24.2%
	Preverbal	N = 132 48.5%	N = 106 30.1%	N = 238 38.1%
	Postverbal	N = 140 51.5%	N = 95 27.0%	N = 235 37.7%
	Total per task	N = 272 100.0%	N = 352 100.0%	N = 624 100.0%
Language contact: GS and Caribbean	**Null**	-	N = 110 32.1%	N = 110 16.8%
	Preverbal	N = 173 55.3%	N = 119 34.7%	N = 292 44.5%
	Postverbal	N = 140 44.7%	N = 114 33.2%	N = 254 38.7%
	Total per task	N = 313 100.0%	N = 343 100.0%	N = 656 100.0%

A-test: Chi-square: *2.651* *p=<.103>*
B-test: Chi-square: *8.804* *p=<.012>*

In the A-test, the bilingual group with CS contact has a higher percentage of postverbal subjects (51.5%) than the group in contact with CS and GS (44.7%). But on the B-test, one finds opposite results, i.e. the bilingual group in contact with GS and CS has a higher percentage of postverbal subjects (44.7%) than the group in contact with CS (27.0%). Furthermore, the B-test is statistically more significant (*p* value is of .012) than the A-test. Therefore, my hypothesis is confirmed in the B-test, in which contact with GS varieties seems to influence the postverbal selection of subjects. The group in contact with CS only presents a higher percentage of postverbal subjects than the other group

(contact with CS and GS) in the A-test. Both groups of bilingual participants have the same statistical significance (*p* value is of .000). The different results in the two tasks might be caused to the diversity of answers to choose from, i.e., possibility of selecting null subjects in the B-test, whereas in the A-test this choice was not made available.

The postverbal selection of subjects by the bilingual group according to their language contact in declarative sentences is presented in table 4.49.

Table 4.49.: Cross-tabulation of bilingual speakers' data with regard to postverbal subjects according to language contact with CS and GS in declarative sentences -C-test (N = 697)

		C-Test
Language contact: Mainly Caribbean	**Null**	N = 121 35.7%
	Preverbal	N = 198 58.4%
	Postverbal	N = 20 5.9%
	Total per task	N = 339 100.0%
Language contact: GS and Caribbean	**Null**	N = 105 29.3%
	Preverbal	N = 211 59.0%
	Postverbal	N = 42 11.7%
	Total per task	N = 358 100.0%

Chi-square: *8.841* *p=<.012>*

Numbers are low to make generalizations, since there is only 62 instances[176] in the entire study out of a total of 697. As observed in table 4.49., the postverbal selection of subjects is higher among the bilingual participants in contact with GS and CS (11.7%) than among the bilingual speakers who are in contact only with CS (5.9%). As indicated in the *p* value (*p* value is of .012), the results in table 4.49. are statistically significant and

[176] Sixty-two items is the sum of twenty postverbal subjects selected by the bilingual participants with CS contact and forty-two items selected by the bilingual participants in contact with CS and GS varieties.

therefore, they confirm my hypothesis. Specifically, in declarative sentences, contact with GS seems to affect the possibility of having postverbal subjects. Analyzing the pragmatic and discursive values of postverbal subjects could provide a better understanding of the postverbal selection of subjects, and their possible convergence with the GS model.

In table 4.50., the overt selection of expletives by the bilingual participants in regard to their language contact is presented. The bilingual participants are divided between those participants who self-reported having contact with CS varieties, versus those bilingual participants who reported having contact with CS and GS.

Table 4.50.: Cross-tabulation of bilingual speakers' data with regard to overt expletive subjects according to language contact with CS and GS in interrogative and declarative sentences -B-test and C-test (N = 103)

Expletives		**B-Test**	**C-Test**	**Total per overt/null**
Language contact: Mainly Caribbean	**Null**	N = 25 89.3%	N = 15 75.0%	N = 40 83.3%
	Overt	N = 3 10.7%	N = 5 25.0%	N = 8 16.7%
	Total per task	N = 28 100.0%	N = 20 100.0%	N = 48 100.0%
Language contact: GS and Caribbean	**Null**	N = 32 97.0%	N = 22 100.0%	N = 54 98.2%
	Overt	N = 1 3.0%	N = 0 0.0%	N = 1 1.8%
	Total per task	N = 33 100.0%	N = 22 100.0%	N = 55 100.0%

B-test: Chi-square: *1.460* *p=<.227>*
C-test: Chi-square: *6.243* *p=<.012>*

Although the number of items is low, as observed in the low numbers in table 4.50. (in the gray cells), it seems that language contact interferes with the selection of overt expletives. For instance, the bilingual participants who reported having contact with CS have a higher percentage of overt expletives in the B-test and C-test than those speakers who have contact with CS and GS. These results suggest that bilingual speakers with GS

contact are converging with GS in the expletive property. Nonetheless, the two bilingual groups have low statistical significance. According to the selection of overt expletives in each task, in regard to their language contact, the C-test shows a higher acceptance of overt expletives among the bilingual participants with CS contact than among the participants who have contact with GS. These latter group did not select any overt subjects in declarative sentences, i.e., in the C-test. Furthermore, the C-test is statistically significant (*p* value is of .012), but the B-test is not. In the B-test, the bilinguals with CS contact also present a higher percentage of overt expletives than the participants with GS and CS contact.

Finally, in the last hypothesis I proposed that if language contact with GS varieties affects the realization of overt complementizers in *that*-trace constructions, then I should find that the bilingual participants who reported having more contact with GS varieties should have a low percentage of overt complemetizers in *that*-trace constructions. In order to prove that, in table 4.51., I present the cross-tabulation of the bilingual speakers' data with regard to overt complementizers in *that*-trace constructions according to their contact with CS and GS in the A-test and B-test.

Table 4.51.: Cross-tabulation of bilingual speakers' data with regard to overt complementizers in *that*-trace constructions according to language contact with CS and GS –A-test and B-test (N = 169)

		A-Test	B-Test	Total
Language contact: Mainly Caribbean	**Accept Null compl.**	N = 27 73.0%	N = 32 76.2%	N = 59 74.7%
	NOT accept Null compl.	N = 10 27.0%	N = 10 23.8%	N = 20 25.3%
	Total per task	N = 37 100.0%	N = 42 100.0%	N = 79 100.0%
Language contact: GS and Caribbean	**Accept Null compl.**	N = 27 58.7%	N = 31 70.5%	N = 58 64.4%
	NOT accept Null compl.	N = 19 41.3%	N = 13 29.5%	N = 32 35.6%
	Total per task	N = 46 100.0%	N = 44 100.0%	N = 90 100.0%

A-test: Chi-square: *1.839* *p=<.175>*
B-test: Chi-square: *.361* *p=<.548>*

Although the numbers in table 4.51. are low, the findings show the tendency followed by bilingual participants. As observed in the table, the highest percentage of acceptance of null complementizers in *that*-trace constructions (i.e., in A-test and B-test) is found among the participants who reported having mainly contact with CS varieties (73.0% and 76.2%, respectively). Similar to results obtained in regard to the expletive property, the results in table 4.51. suggest that the bilingual participants in contact with GS varieties are converging towards the GS model. These results support my hypothesis that contact with GS will affect the (lower) acceptance of null complementizers in *that*-trace constructions. But, it is worth considering that the number of items is low, and that none of the two bilingual groups is statistically significant. According to the task, the two bilingual groups (according to their language contact) show a higher percentage of null complementizers' acceptance in the B-test than in the A-test. Although none of these tasks is statistically significant. This lack statistical significance suggests that some other factors may be affecting the acceptance of null complementizers. For instance, since in

the A-test null subjects are not one of the possible answers, the acceptance of constructions with null complementizers may be affected by the nature of the task itself. Further research on this aspect is suggested.

4.2.6. Summary of the four *pro*-drop properties in the grammaticality judgment tasks (A-test, B-test, and C-test), according to different linguistic and social factors

This section summarizes the most important findings in the three GJ tasks designed for this study (A-test, B-test, and C-test), as selected by the three DS groups (monolinguals from El Cibao, monolinguals from Santo Domingo, and bilinguals). The three GJ tasks addressed the four *pro*-drop properties analyzed in this research (phonologically null subjects, subject-verb inversion, expletives, and *that*-trace filter), according to different linguistic and social factors. In the next two subsections (4.2.6.1. and 4.2.6.2.), a general overview of the results is presented. In the first one (4.2.6.1.), I refer to the linguistic variables studied to analyze the four *pro*-drop properties under consideration. The second subsection (4.2.6.2.) presents the influence that some social variables may have over the four *pro*-drop properties.

4.2.6.1. Summary of the four *pro*-drop properties in the grammaticality judgment tasks (A-test, B-test, and C-test), according to different linguistic factors

This section presents the results of the four of the *pro*-drop properties, according to the influence that some linguistic factors may have over them. Only statistically significant data will be discussed in this section. Table 4.52. presents an overview of

these significant results, summarizing the data provided by the three DS groups in each one of the GJ tasks, according to the different linguistic factors under study. Some of the cells in table 4.52. are in blank, whereas some others have a mark. When the data was not available or when the data was not statistically significant, the cell was left blank. For instance, in the A-test, the selection of overt and null subjects was not examined; and the cells that measure the null subject property ('NULL subjects' and 'OVERT subjects') are left blank. When the data did not provide statistically significant data,[177] the cell was left also in blank. An example of this appears in the B-test when analyzing the null subject property ('NULL subjects' and 'OVERT subjects') according to the subject person (1st, 2nd, or 3rd). On the other hand, when the variables are statistically significant, they are marked with different symbols, depending on the percentage. The legend of the symbols in the marked cells is found under table 4.52.

[177] The results will be considered as not statistically significant when, after the cross-tabulation of the data provided by three DS groups, the *p* value obtained from the Pearson chi-square test is over .050.

Table 4.52.: Overview of the final results provided by the three DS groups in the three GJ tasks, according to different linguistic variables

		El Cibao			**Santo Domingo**			**Bilingual**		
		Interrogatives		Declaratives	Interrogatives		Declaratives	Interrogatives		Declaratives
		A-test	B-test	C-test	A-test	B-test	C-test	A-test	B-test	C-test
NULL subjects	1st									
	2nd					+			+	
	3rd					+			+	
OVERT subjects	1st									
	2nd					**			*	
	3rd					***			**	
SV	Pronominal		+	*	*	*	***		*	****
	Lexical			**	***		****			****
	Wh-adjunct		*			**		*		
	Wh-argument		+			+		+		
VS	Pronominal		**	+	+	+	+		+	+
	Lexical			+	+		+			+
	Wh-adjunct		+			+		+		
	Wh-argument		***			**		*		
Overt expletives			+							
Null *that* complementizer					*					

Legend table 4.52.:

+	less than 50.0%, but still significant
*	50.0% to 59.9%
**	60.0% to 69.9%
***	70.0% to 79.9%
****	80.0% to 89.9%

As observed in table 4.52., the first *pro*-drop property (phonologically null subjects) offers statistically significant data only in the B-test (interrogatives), in two of the DS groups: the bilingual and the Santo Domingo groups. In both cases, the highest percentage of overt subjects is found in third person subjects, followed by second person subjects. But since, in the B-test, some null subjects can also be found in those two person subjects (second and third person), it cannot be stated that the [+ strong] nominal features in Agr have been lost in any of the two groups named above, i.e., the bilingual and the Santo Domingo groups. However, in the B-test, the Santo Domingo group seems

to be moving towards the adoption of the [- strong] nominal features in Agr in third person subjects, since a high percentage of overt third person subjects in interrogative sentences is found (see '***'). The high percentage of overt third person subjects may be associated with some other variables, such as the need to disambiguate the subject referent. Specifically, in the scenarios presented in the GJs, different referents could function as subjects of the main verb. The selection of an overt subject may discern one specific subject referent out of all the possible ones. The group from El Cibao does not offer any statistically significant data in this first *pro*-drop property analyzed (phonologically null subjects). El Cibao participants may opt for overt and null subjects in a random way, without attributing these two types of subjects (null and overt) to any specific and set value, i.e. they may not have a stable representation of the nominal value in Agr.

In the second *pro*-drop property ('SV' and 'VS'), the Santo Domingo group shows the highest number of statistically significant data, i.e., the highest number of marked cells. In this second property, two linguistic variables are considered: the pronominal and lexical nature of the subjects, and the type of wh-phrase before its extraction (wh-argument vs. wh-adjunct).

With respect to the first of these linguistic variables (the lexical and pronominal nature of the subjects), the three groups of DS participants have statistically significant data in the C-test. In this test, where the participants' competence in declarative sentences is studied, the bilingual participants show a similar high percentage (between 80.0% and 89.0%, as marked with the '****') of preverbal pronominal and lexical subjects. These results indicate that in the C-test, the bilingual participants show a tendency to adopt the

[- strong] verbal values in T. This apparent adoption for the verbal values seems to affect in a similar way all subject types, i.e., pronominal and lexical subjects. But, since postverbal subjects are still possible, it cannot be confirmed that the [- strong] verbal values in T have been lost. Similar to the bilingual group, the two monolingual groups also show statistically significant data in the C-test, in regard to the pronominal and lexical nature of the subject. In the C-test, the Santo Domingo group selected a high percentage of preverbal lexical and pronominal subjects, although the percentage is higher with lexical subjects than with pronominal ones. If the Santo Domingo participants are also experiencing a change in the verbal values in T, this change seems to affect first lexical subjects, and later pronominal subjects. The El Cibao group does not show a percentage of preverbal lexical and pronominal subjects as high as the other two groups of participants. It is worth mentioning the test conditions in the GJ tasks: the context framing each item is limited (a couple of sentences), and that the participants must select from a series of alternatives, i.e., their answers are not as free as in the oral production of speech.

In sum, observing the rows horizontally, i.e. ‘pronominal’ and ‘lexical’ subjects in an ‘SV’ position (across the three groups of participants and in the three GJ tasks), lexical subjects show higher percentages of statistically significant data in preverbal position than pronominal subjects. These results suggest that, in the three groups of speakers, the [+ strong] verbal values in T are still present in pronominal and lexical subjects (in declarative and in interrogative sentences). Along with the [+ strong] features, the [- strong] verbal values seem to start appearing in some situations. Specifically, in their competence, the bilingual group seems to be adopting the [- strong] verbal values in T in

declarative sentences, which is affecting both pronominal and lexical subjects. The Santo Domingo group seems to be following the bilingual group in this process. In declarative sentences, the [- strong] verbal values in T seem to affect lexical subjects first and later pronominal ones.

According to the second linguistic variable used to study the position of subjects, i.e., the type of wh-phrase, one observes that the participants from El Cibao seem to be the most sensitive ones. In the B-test, they selected between 70.0% and 79.9% ('***') postverbal subjects with wh-argumental interrogative sentences. In this same case, the Santo Domingo group selected between 60.0% and 69.9% postverbal subjects with wh-argumental interrogative sentences. The bilingual group does not have statistically significant data with the wh-phrase in the B-test. But in the A-test, the bilingual group selected between 50.0% and 59.9% postverbal subjects with wh-argumental interrogative sentences.

Finally, in the last two properties, very few data is statistically significant. The selection of overt expletives is only statistically significant in the B-test among the El Cibao participants. The last property (*that*-trace filter) is only statistically significant in the A-test, among the Santo Domingo participants. These results suggest that further research is needed in these two areas. The lack of significance in these last two *pro*-drop properties may be caused by the low number of items used in the study to analyze them.

4.2.6.2. Summary of the four *pro*-drop properties in the grammaticality judgment tasks (A-test, B-test, and C-test), according to different social factors

This section presents an overview of the results, in regard to the influence that some social factors may have over the four *pro*-drop properties under study. As in the previous section (4.2.6.1.), this section presents only the most important statistically significant data found in the study. Since the social variables studied for each group is different, the data in table 4.53. below is obtained after compiling the data that each group provided in the different GJ tasks. Similar to table 4.52., in table 4.53., some of the cells are blank, and others are marked with different symbols. In the former case, the cell is left blank if no statistically significant data are obtained, or if the data are not available (such as null subjects in the A-test). In the cells where a symbol is inserted, each symbol represents a different range of statistically significant percentages. The legend for each symbol is found under the table.

Table 4.53.: Overview of the final results provided by the three DS groups in the three GJ tasks, according to different social variables

		El Cibao (Age)				Santo Domingo (Education level)			Bilingual (Patterns of language use)						
									Lg @ home		Lg comfort/ Preference			Lg contact	
		Age 18-29	Age 30-39	Age 40-50	Age over 50	Elem.	Second.	Univ.	Span.	Span. & Engl.	Span.	Engl.	Span. & Engl.	CS	CS & GS
NULL subjects	A-test														
	B-test										+				
	C-test	+	+	+	+						+				
OVERT subjects	A-test														
	B-test										*				
	C-test	***	*	**	***						**				
SV	A-test	*	+	+	+				+	*	+	**	+		
	B-test	+	+	+	+						+	+	+	+	+
	C-test	**	+	+	+	*	+	*			*	+	**	*	*
VS	A-test	+	***	**	*				*	+	*	+	*		
	B-test	+	+	+	+						+	+	+	+	+
	C-test	+	+	+	+	+	+	+			+	+	+	+	+
Overt expletives			+												
Null *that* complementizer															

Legend table 4.53.:

+	less than 50.0%, but still significant
*	50.0% to 59.9%
**	60.0% to 69.9%
***	70.0% to 79.9%
****	80.0% to 89.9%

In table 4.53., the level of education of the Santo Domingo participants offers the lowest amount of statistically significant data. This indicates that the realization of *pro*-drop properties is not directly linked to the educational level of the Santo Domingo participants. In the case of the Santo Domingo participants, some other variables may be intervening in their selection of answers of the four properties under study.

In the case of the El Cibao participants, the age of the participants was the social variable under study. In the first property (phonologically null subjects), the C-test is the only statistically significant task for the different age ranges in El Cibao group. In the C-test, the youngest group of participants (age 18 – 29) and the oldest one (age over 50)

show the highest percentages of overt subjects ('***'), followed by the participants between 40 and 50 ('**'). The lowest percentage of overt subjects is found among the participants between 30 and 39 ('*'). The youngest group of El Cibao participants (age 18 - 29) shows that, many of the overt subjects are preverbal ('**') in the C-test, i.e., in declarative sentences. Continuing with the second *pro*-drop property under study (SV and VS), it is noteworthy that in the A-test (where there were only preverbal and postverbal subjects in interrogative sentences), the youngest group of participants (age 18 – 29) has between 50.0% and 59.9% preverbal subjects, whereas the rest of the participants has lower percentages of preverbal subjects in interrogative sentences (A-test). In the A-test, where the participants could choose only between preverbal and postverbal subjects in interrogative sentences, the three oldest groups of participants show higher percentages of postverbal subjects than preverbal ones. The highest percentage of postverbal subjects in the A-test was selected by the participants between 30 and 39 ('***'). This percentage of postverbal subjects decreases as the participants' age increases (see horizontal row of VS in the A-test, in table 4.53.). These data suggest that the [+ strong] verbal values in T are present among all the El Cibao participants, as evidenced in the A-test. With respect to the last two *pro*-drop properties (expletives and *that*-trace filter), the different age groups in El Cibao do not show statistically significant data.

The social variable studied in the case of the bilingual participants is the 'patterns of language use.' This variable is divided into three sub variables: language at home, language comfort level, and language contact. The language spoken at home shows the lowest statistically significant data (less symbols in table 4.53.), whereas the language comfort level variable shows the highest amount of significant data (higher amount of

symbols in table 4.53.). According to the language spoken at home, evidence from the A-test (the only statistically significant data task) shows that speaking Spanish at home promotes a higher percentage of postverbal subjects than preverbal ones, whereas speaking in Spanish and English entails a higher percentage of preverbal subjects in interrogative sentences. In this latter case, English seems to have a slight effect on the highest selection of preverbal subjects in interrogative sentences. Therefore, the [- strong] verbal value in T, proper of English-like languages seems to be mildly affecting the [+ strong] verbal values of T, proper of GS-like languages. The English influence is more evident in the language comfort level sub variable. In this second social sub variable, those participants who reported feeling more comfortable using only English selected between 60.0% and 69.9% ('**') preverbal subjects in the A-test. One can also observe that in declarative sentences (the C-test), the highest percentage of statistically significant preverbal subjects is selected by those participants who felt similarly comfortable in Spanish and in English. On the other hand, the [+ strong] verbal features in T (proper of GS-like languages) seem to affect the postverbal selection of subjects in interrogative sentences. The participants who felt comfortable using Spanish or Spanish and English have higher percentages of postverbal subjects than the participants who preferred using only English. Therefore, contact with English seems to influence the postverbal position of subjects, lowering their acceptance (English has almost categorically preverbal subjects). Finally, the linguistic contact with other Spanish varieties does not show statistically significant data in the acceptance of phonologically null subjects, but it shows statistically significant data in the position of subjects (another *pro*-drop property).

However, in the latter case, the percentages of preverbal and postverbal subjects are not very high.

In sum, out of the three sub variables that form the variable 'patterns of language use,' the language comfort level sub variable seems to provide the most important data. In this sub variable, preference for English seems to boost the preverbal position of subjects in interrogatives (A-test), whereas contact with Spanish seems to boost the postverbal position of subjects in interrogative sentences. No statistically significant data is found in the last two *pro*-drop properties (expletives and *that*-trace filter), which suggests that further studies are needed.

In the remaining part, the study of the four *pro*-drop properties shifts from the participants' competence to their performance. Up until this point, the GJ tasks provided data from the participants' competence in interrogative and declarative sentences, in regard to the four *pro*-drop properties; but from this point of the chapter on, the study addresses the participants' performance on two of the properties (phonologically null subjects, and subject-verb inversion). In the study of the participants' performance in these two *pro*-drop properties, linguistic and social variables are considered.

4.3. Results from the oral tasks

In this section of the chapter, I present the results from the three oral tasks used in this study. The three oral tasks are: a role-play, an oral narration of a personal story, and the retelling of a frog story. The role play task was designed to elicit oral interrogative sentences, whereas the other two oral tasks (personal story and frog story) were designed to obtain the oral production of declarative sentences. In the following subsections, the

results obtained in the oral tasks are presented in order to address some of the research questions and hypotheses presented in chapter 1. In this section the hypotheses that deal with the use of subjects according to the person and number are not addressed, nor those hypotheses that refer to two of the *pro*-drop properties: the use of expletives, and the (non) violation of the *that*-trace filter. The hypotheses named above are not addressed in this section due to the low amount of statistical data obtained to answer them. For instance, each oral task promoted the elicitation of specific person and number subjects, and not a wide variety of all of them. Since in the oral tasks the elicited subjects do not represent a balanced distribution of the subjects according to their person and number, the obtained data were not sufficient to have a valid statistical representation to compare all person and number subjects in each independent task. Moreover, the hypotheses addressing the two *pro*-drop properties named above (expletives and *that*-trace filter) are not considered in this section of the results chapter. In the oral tasks, the amount of instances in which these two properties appeared is not sufficient to run statistical analyses. Therefore, those hypotheses that address these three topics (person and number of the subject, expletives, and *that*-trace filter) are only addressed in section 4.2., i.e., in the analysis of the GJ tasks.

Sections 4.3.1. and 4.3.2. present the results obtained from the two DS monolingual groups of speakers (El Cibao and Santo Domingo), and sections 4.3.3. and 4.3.4. address the results from the two DS monolingual groups and from the DS bilingual one.

4.3.1. Overt vs. null subjects: Results from the three oral tasks by the two monolingual groups

In this section, the results obtained from the three oral tasks in regard to one of the *pro*-drop properties are presented: the possibility of having phonologically null subjects. As presented in chapter 1, I hypothesized that if monolingual DS speakers prefer the [- strong] nominal features in Agr, I should find a higher percentage of overt subjects than null ones (hypothesis one). But if, on the other hand, they are changing towards the [+ strong] nominal features in Agr, then I should find a higher percentage of null subjects than of overt ones (hypothesis two). In my fourth hypothesis, I propose that if monolingual DS speakers show a tendency towards the [- strong] nominal value in Agr, the high percentage of overt subjects should be in both declarative and interrogative sentences. The following tables address these three hypotheses (first, second, and fourth, as mentioned above, and also exposed in chapter 1) and present the acceptance of overt and null subjects per tasks, by the two groups of monolingual speakers. After the discussion of the following three tables, a brief comparison will be given with the results obtained in the GJ tasks (see tables 4.1. and 4.2.).

Table 4.54. shows a cross-tabulation of speakers from El Cibao and Santo Domingo with regard to overt and null subjects in interrogative sentences (in the role-play task). The number (N) in the title of the table refers to the total amount of subjects considered in the calculation of the chi-square and *p* values, i.e., all the data in table 4.54.

Table 4.54.: Cross-tabulation of speakers from El Cibao and Santo Domingo with regard to overt and null subjects in interrogatives – Role play (N = 774)

Role play	El Cibao	Santo Domingo	Total overt/null
Null subjects	N = 114 29.8%	N = 105 26.8%	N = 219 28.3%
Overt subjects	N = 268 70.2%	N = 287 73.2%	N = 555 71.7%
Total of subjects per origin	N = 382 100.0%	N = 392 100.0%	N = 774 100.0%

Chi-square: *.891* *p=<.345>*

In the oral role-play task, where subjects in interrogative sentences are elicited, both groups of speakers prefer using overt subjects (71.7%) over null ones (28.3%), as observed in the gray cells in table 4.54. According to each monolingual group, the participants from Santo Domingo show a slightly higher preference for overt subjects in the role-play task than the El Cibao ones (73.2% and 70.2%, respectively). However, in this table, the *p* value under the table indicates that there is not statistical significance between the production of overt and null subjects and the origin of the monolingual speakers (El Cibao and Santo Domingo). According to my hypotheses, the high percentage of overt subjects by both groups of monolingual speakers could be explained by a gradual dissapearing of the [+ strong] nominal features in Agr, and a gradual emergence of the [- strong] ones. But since the percentage of overt subjects produced by the two monolingual groups is slightly over 70.0%, it cannot be confirmed that the [- strong] nominal features are being adopted by any of the monolingual DS groups.

The preference for overt and null subjects in the two oral tasks eliciting declarative sentences is presented in tables 4.55. and 4.56. In table 4.55., one can observe a cross-tabulation of overt and null subjects in declarative sentences by the two monolingual groups in the narration of a personal story.

Table 4.55.: Cross-tabulation of speakers from El Cibao and Santo Domingo with regard to overt and null subjects in declaratives – Personal Story (N = 1956)

Personal story	El Cibao	Santo Domingo	Total overt/null
Null subjects	N = 555 58.1%	N = 487 48.7%	N = 1042 53.3%
Overt subjects	N = 401 41.9%	N = 513 51.3%	N = 914 46.7%
Total of subjects per origin	N = 956 100.0%	N = 1000 100.0%	N =1956 100.0%

Chi-square: *17.181* *p=<.000>*

As table 4.55. illustrates, when producing declarative sentences in narrations that were based on a personal story, the monolingual groups produced a total of 1956 verbs. Out of all these verbs, the percentage of overt (46.7%) and null subjects (53.3%) is similar, as observed in the gray cells. But, if the two groups are observed independently, one can notice that the El Cibao group presents a difference between overt and null subjects (41.9% and 58.1%, respectively), favoring the overt subjects (58.1%). On the other hand, the participants from Santo Domingo show a slight preference for null subjects (51.3%) over overt ones (48.7%). It is worth noting that in the Santo Domingo group the percentages of overt and null subjects are closer (51.3% and 48.7%) than in the El Cibao group. The similar percentages of overt and null subjects among the Santo Domingo participants suggest that, for them, the use of overt or null subjects may not be marked with distinct (discursive or pragmatic) features. These data are statistically significant (*p* value is of .000). In the personal story task, the preference for overt and null subjects and the origin of the participants are statistically related. Since the percentage of overt and null subjects in this task is very similar, it could be considered that the nominal values in Agr are not marked with [- strong] features. On the contrary, it can be suggested that the monolingual DS groups are marked with the [+ strong] nominal features in Agr, and that

the overt and null realization of subjects is determined by discursive and pragmatic values.

Regarding the three hypotheses presented above, the results in table 4.55. demonstrate that in the personal story task (where declarative sentences are elicited), the two monolingual groups do not show to be marked with [- strong] nominal values in Agr, but with [+ strong] ones. The difference between the results in interrogative and in declarative sentences (see tables 4.54. and 4.55.) may indicate that the nominal value of Agr affects differently interrogative and declarative sentences. Moreover, the monolingual DS speakers seem to have an unstable representation of the nominal values.

In table 4.56. I present a cross-tabulation of the oral use of overt and null subjects in declarative sentences in another oral task: the retelling of a frog story. This table shows the data from the two monolingual groups of DS speakers.

Table 4.56.: Cross-tabulation of speakers from El Cibao and Santo Domingo with regard to overt and null subjects in declaratives – Frog Story (N = 594)

Frog story	El Cibao	Santo Domingo	Total overt/null
Null subjects	N = 123 41.7%	N = 127 42.5%	N = 250 42.1%
Overt subjects	N = 172 58.3%	N = 172 57.5%	N = 344 57.9%
Total of subjects per origin	N = 295 100.0%	N = 299 100.0%	N = 594 100.0%

Chi-square: *.037* *p=<.847>*

Out of the total number of subjects produced (N = 594) by the two monolingual groups of speakers in the retelling of the frog story, 57.9% of the subjects are overt, and 42.1% are null, as presented in the shadow cells of table 4.56. Specifically, the El Cibao group has a rate of 58.3% overt subjects and 41.7% null ones. Similarly, the Santo Domingo group also tends to prefer overt subjects (57.5%) over null ones (42.5%). Nonetheless, the statistical significance of the variables analyzed in table 4.56. shows that these variables

are not correlated. In the frog story task, the origin of the monolingual participants and the use of null and overt subjects are not related. This lack of statistical significance indicates that other factors may be intervening. For instance, the higher percentage of overt subjects found in the frog story task as compared to the percentage found in the narration of a personal story could be explained by the nature of the task itself. In the frog story task, where many different third person subjects appeared, the overt use of subjects may be needed to mark discursive and pragmatic factors, such as the switch of subject referents or topichood.[178] And in the personal story task, there are not many switches of subject referents, since this task promotes the narration of a story in first person, although third person subjects occasionally occurred.

My fourth hypothesis is addressed when one compares the results of the three oral tasks (tables 4.54. – 4.56.); i.e., interrogative and declarative sentences. In the frog story (see table 4.56.) and in the personal story (see table 4.55.), the percentages of overt and null subjects are not extremely far apart. On the other hand, it should be noted that in the role-play task (see table 4.54.), overt subjects are preferred over null ones. These results address my fourth hypothesis, where I proposed that if the [- strong] nominal values are adopted (i.e., the obligatory expression of overt subjects), they should be found in both interrogative and declarative sentences. Since the preference for overt and null subjects differs in the role-play task (it measures the use of subjects in interrogative sentences), and in the two oral tasks testing declarative sentences (the personal story and the frog

[178] A switch in subject reference has been found to condition the uses of overt subjects (Silva-Corvalán, 1982; Cameron, 1992). Adopting Cameron's (1992: 117-18) definition of switch-reference, it 'refers to two related reference relations that may hold between two NP's. When these two NP's have different referents, they are 'switch' in reference. When these two NP's share the same referent, they are 'same' in reference.'

story task), then it can be concluded that the type of sentence (interrogative versus declarative sentences) seems to affect the choice of the nominal value of Agr.

In the oral tasks eliciting subjects in interrogative sentences, the percentage of overt subjects is higher than in the other two oral tasks eliciting subjects in declarative sentences. These results suggest that the monolingual DS speakers have an unstable representation of the nominal values in Agr, which seems to be affected by the nature of the sentence where the subject appears (interrogative versus declaratives). In the case of the oral production of subjects in declarative sentences, the percentage of overt subjects is higher in the retelling of the frog story than in the narration of the personal story.

In this section, I compare the results of the three oral tasks (tables 4.54. – 4.56.) with the GJ ones (tables 4.1. and 4.2.), in regards to the acceptance and production of overt and null subjects. In interrogative sentences (i.e., in the B-test and in the role-play task), both monolingual groups show a percentage of over 69.0% overt subjects in the two tasks (B-test and role-play task). Specifically, in interrogative sentences, the two monolingual groups tend to prefer overt subjects in their competence (GJs) and in their performance (oral tasks). This preference for overt subjects over null ones indicates that these two groups of monolingual speakers are losing their [+ strong] nominal value in Agr. But none of these two tasks (B-test and role-play) offer statistically significant data when the data from the two monolingual groups are cross-tabulated.

However, in declarative sentences (C-test, personal story, and frog story), the preference for overt and null subjects does not follow the same pattern as in interrogative sentences. In the C-test, the two monolingual groups selected more overt subjects than null ones, although this GJ task does not offer statistically significant data. Out of the two

oral tasks eliciting declarative sentences (personal story and frog story), only the personal story task provides statistically significant data, but not the frog story. In the personal story task (where free spontaneous speech is elicited), one observes that the El Cibao group prefers null subjects (58.1%) over overt ones (41.9%). Unlike this group, the Santo Domingo group has a slight preference for overt subjects (51.3%) over null ones (48.7%). These results indicate that, in the oral production of declarative sentences, the Santo Domingo group has a similar preference for overt and null subjects. This similarity indicates that, for the Santo Domingo group, these two types of subjects may have a similar (pragmatic-discursive) value; i.e., the Santo Domingo group does not seem to make a pragmatic-discursive distinction in the use of overt or null subjects. The El Cibao group seems to differentiate a little more between the uses of these two types of subjects. In reference to my hypotheses, the results observed above indicate that the two monolingual groups have available to them the [+ strong] nominal features in Agr, since null subjects can be found in all tasks. But these values seem to have a different distribution in interrogative and declarative sentences. In interrogative sentences, DS speakers seem to be in the process of losing the [+ strong] values in Agr, or they may be undergoing a process of cliticization. This latter possibility would be established if pronominal preverbal subjects are preferred preverbally.

As previously stated, those hypotheses that refer to the use of subjects according to the person and number of the subject are not addressed in this part of the chapter.[179]

[179] Each oral task tended to elicit a higher percentage of one specific person. For instance, in the role-play task, most of the subjects are second person used in interrogative sentences, whereas in the personal story task most of the subjects tended to be first person subjects used in declaratives. In the frog story task third person subjects in declarative sentences were elicited. Since a wide variety of subject samples cannot be found in all the oral tasks, my third hypothesis is not considered in any of the three oral tasks.

4.3.2. Subject-verb inversion: Results from the three oral tasks by the two monolingual groups

In this section I address the results obtained from the oral tasks in regard to other *pro*-drop property: subject and verb inversion. Since the inversion in [+ *pro*-drop] languages has been linked to different factors,[180] such as the pronominal and lexical nature of the subject, the type of sentence (interrogative vs. declarative), or the nature of the wh-phrase before its extraction, I address all these factors in the following subsections.

4.3.2.1. Subject-verb inversion (Pronominal and lexical): Results by the monolinguals

In regard to the effect that the lexical or pronominal nature of the subject has over the inversion of the subject, in my fifth hypothesis I proposed that if the monolingual DS speakers exhibit a preference for the [- strong] verbal features in T (over the [+ strong] ones), then I should find a higher percentage of overt preverbal subjects in all sentence types, irrespectively of the pronominal or lexical nature of the subjects. Tables 4.57., 4.58., and 4.59. illustrate the percentages of preverbal pronominal and lexical subjects in interrogatives and declarative sentences. After presenting these tables, a comparison with the results obtained in the GJ tasks is provided.

Table 4.57. presents the percentage of pronominal and lexical subjects in the oral production of interrogative sentences by the two groups of monolingual DS speakers living in the Dominican Republic. Since my fifth hypothesis is related to preverbal subjects (shadowed cells), I will only refer to these ones in the table below (Table 4.57.).

[180] See chapters 1 and 2 for further details.

Reference to the use of postverbal subjects in the role-play task can be found in table 4.60., where my sixth hypothesis is being addressed.

Table 4.57.: Cross-tabulation of speakers from El Cibao and Santo Domingo with regard to preverbal pronominal and lexical subjects in interrogatives – Role Play (N = 774)

Role-play		**Null**	**Preverbal**	**Postverbal**	**Total per pron/lex**
El Cibao	**Null**	N = 114 100.0%	-	-	N = 114 100.0%
	Pronominal	-	N = 127 76.5%	N = 39 23.5%	N = 166 100.0%
	Lexical DP	-	N = 59 57.8%	N = 43 42.2%	N = 102 100.0%
	Total per position	N = 114 29.8%	N = 186 48.7%	N = 82 21.5%	N = 382 100.0%
Santo Domingo	**Null**	N = 105 100.0%	-	-	N = 105 100.0%
	Pronominal	-	N = 181 72.1%	N = 70 27.9%	N = 251 100.0%
	Lexical DP	-	N = 24 66.7%	N = 12 33.3%	N = 36 100.0%
	Total per position	N = 105 26.8%	N = 205 52.3%	N = 82 20.9%	N = 392 100.0%

El Cibao: Chi-square: *396.771* *p=<.000>*
Santo Domingo: Chi-square: *392.625* *p=<.000>*

As presented in the gray cells in table 4.57., the two monolingual groups of speakers show that, in interrogative sentences (in the role-play task), the percentage of preverbal pronominal subjects is higher than the percentage of preverbal lexical subjects. The participants from El Cibao show that, out of the total amount of overt pronominal subjects, 76.5% of them are preverbal; whereas out of all the total amount of overt lexical subjects, 57.8% are preverbal. On the other hand, the participants from Santo Domingo show a lower percentage of preverbal pronominal subjects (72.1%) than the El Cibao group (76.5%), and a higher percentage of preverbal lexical subjects (66.7%) than the speakers from El Cibao (57.8%). The two monolingual groups are statistically significant (*p* value is of .000), as well as the preverbal and postverbal selection of subjects (*p* value

is of .000). But the pronominal or lexical nature of the subjects is not statistically significant. Consequently, the nature of the subject is not related to the place where the subject is placed by the monolingual speakers in this task. This higher percentage of preverbal pronominal subjects over lexical ones in interrogative sentences may be interpreted as the subject undergoing a cliticization process (i.e., the subject and the verb are bond together), as proposed by Lipski (1977), Heap (1990), and Ordóñez and Olarrea (2006). Only pronominal subjects show a tendency to be preverbal, and become clitics of the verb. However, one cannot confirm that the [- strong] verbal values in T are being adopted by any of the two monolingual groups. Consequently, my hypothesis is not confirmed.

Tables 4.58. and 4.59. present the data from the two oral tasks eliciting subjects in declarative sentences (the narration of a personal story and the retelling of a frog story). Table 4.58. illustrates a cross-tabulation of the two monolingual groups of speakers with regard to preverbal subjects (pronominal and lexical) produced in the narration of a personal story. Although in table 4.58. the total amount of subjects used in the personal story task are presented (i.e. null, preverbal, and postverbal), I will refer only to the preverbal ones (shadowed cells), since these are the ones needed to prove my hypothesis. The postverbal use of subjects in the personal story task is presented in a different table (table 4.61.).

Table 4.58.: Cross-tabulation of speakers from El Cibao and Santo Domingo with regard to preverbal pronominal and lexical subjects in declaratives – Personal story (N = 1956)

Personal story		**Null**	**Preverbal**	**Postverbal**	**Total per pron/lex**
El Cibao	**Null**	N = 555 100.0%	-	-	N = 555 100.0%
	Pronominal	-	N = 239 94.1%	N = 15 5.9%	N = 254 100.0%
	Lexical DP	-	N = 102 69.4%	N = 45 30.6%	N = 147 100.0%
	Total per position	N = 555 58.1%	N = 341 35.7%	N = 60 6.2%	N = 956 100.0%
Santo Domingo	**Null**	N = 487 100.0%	-	-	N = 487 100.0%
	Pronominal	-	N = 357 90.2%	N = 39 9.8%	N = 396 100.0%
	Lexical DP	-	N = 90 76.9%	N = 27 23.1%	N = 117 100.0%
	Total per position	N = 487 48.7%	N = 447 44.7%	N = 66 6.6%	N = 1000 100.0%

El Cibao: Chi-square: *1062.496* *p=<.000>*
Santo Domingo: Chi-square: *1027.482* *p=<.000>*

The production of overt preverbal pronominal and lexical subjects in declarative sentences is presented in the gray cells in table 4.58. Specifically, the El Cibao group produced 94.1% of the pronominal subjects in preverbal position, and 69.4% of all the lexical subjects produced in this task are also in preverbal position. On the other hand, the Santo Domingo group has 90.2% preverbal pronominal subjects, and 76.9% of preverbal lexical ones. The high percentage of preverbal pronominal and lexical subjects produced among the Santo Domingo group suggests that they seem to be moving towards a stable representation of the strength value in T. This value seems to affect pronominal subjects first and later lexical subjects. Statistically, the two monolingual groups are equally significant (*p* value is of .000), and both preverbal and postverbal subjects are also significant (*p* value is of .002, and *p* value is of .000, respectively). However, the pronominal or lexical nature of the subjects is not statistically significant. Therefore, the

nature of the subject is not related to the position where subjects are produced by the two monolingual groups in this task. These results show that both monolingual groups exhibit a high percentage of preverbal subjects, especially pronominal ones. Since there are also some postverbal subjects, it cannot be stated as a fact that the monolingual DS participants have adopted the [- strong] verbal value in T. Nonetheless, it can be suggested that pronominal subjects may be undergoing a cliticization process as explained earlier, which seems to start in declarative sentences. Comparing the percentages of preverbal subjects in the personal story task and in the role-play task, one can notice that the percentages of preverbal pronominal and lexical subjects in the personal story task (declarative sentences) are higher (El Cibao: 94.1% pronominal and 69.4% lexical; and Santo Domingo: 90.2% pronominal and 76.9% lexical) than in the role-play task, i.e. than in interrogative sentences (El Cibao: 76.5% pronominal and 57.8% lexical; and Santo Domingo: 72.1% pronominal and 66.7% lexical). The two monolingual groups have a higher percentage of preverbal pronominal subjects than of preverbal lexical ones, as observed also in the oral production of interrogative sentences. In sum, although the [- strong] verbal value in T is not totally adopted, it is worth noting that pronominal subjects seem to be losing the [+ strong] value, especially in declarative sentences. But lexical subjects do not show the exact same tendency. As a result, my hypothesis cannot be supported, i.e. pronominal and lexical subjects do not seem to be undergoing the exact same processes in all sentence types.

Table 4.59. presents the cross-tabulation of the two monolingual groups of DS speakers in regard to preverbal pronominal and lexical subjects as produced in declarative sentences in the frog story task, i.e., in the production of subjects in declarative sentences.

As in the two previous tables, in table 4.59., I present the total amount of subjects produced by the two groups of monolingual speakers in this task, but I will only discuss the data related to my hypothesis, i.e., the gray cells (preverbal subjects). The oral production of the postverbal subjects will be discussed in table 4.62. below.

Table 4.59.: Cross-tabulation of speakers from El Cibao and Santo Domingo with regard to preverbal pronominal and lexical subjects in declarative sentences – Frog story (N = 594)

Frog story		**Null**	**Preverbal**	**Postverbal**	**Total per pron/lex**
El Cibao	**Null**	N = 123 100.0%	-	-	N = 123 100.0%
	Pronominal	-	N = 17 100.0%	N = 0 .0%	N = 17 100.0%
	Lexical DP	-	N = 116 74.8%	N = 39 25.2%	N = 155 100.0%
	Total per position	N = 123 41.7%	N = 133 45.1%	N = 39 13.2%	N = 295 100.0%
Santo Domingo	**Null**	N = 127 100.0%	-	-	N = 127 100.0%
	Pronominal	-	N = 27 96.4%	N = 1 3.6%	N = 28 100.0%
	Lexical DP	-	N = 122 84.7%	N = 22 15.3%	N = 144 100.0%
	Total per position	N = 127 42.5%	N = 149 49.8%	N = 23 7.7%	N = 299 100.0%

El Cibao: Chi-square: *304.488* *p=<.000>*
Santo Domingo: Chi-square: *303.821* *p=<.000>*

In the gray cells in table 4.59., the percentage of preverbal pronominal and lexical subjects in the retelling of the frog story is presented. The number of items in some of the cells is very low. Therefore, no generalizations can be made, although some comments are afforded. In general, the two monolingual groups show a higher percentage of preverbal pronominal subjects than preverbal lexical ones. Before presenting in detail the results in table 4.59., it must be noted that the two monolingual groups provide statistically significant data (*p* value is of .000). When observing the gray cells in the

table above, the group from El Cibao shows that all pronominal subjects produced in the retelling of the frog story are preverbal (100.0%), whereas they have 74.8% of the lexical subjects in a preverbal position. On the other hand, the Santo Domingo group produced 96.4% of the overt pronominal subjects preverbally, and 84.7% of the lexical ones are also preverbal. The high production of preverbal lexical subjects may be due to the nature of the task. That is, in the frog story task (where I coded all [+ animate] subjects; i.e., both [+ human] and [- human] subjects), many animal referents participated in the story and became subjects of the sentences. When there is a switch in subject referent, a preverbal subject is required to mark the change of topic. Furthermore, in GS when one needs to address animals as subjects in a sentence, lexical subjects are normally used and not pronominal ones. Precisely, only the lexical subjects are statistically significant (*p* value is of .034), but not the pronominal subjects. All these reasons would explain the higher percentage of preverbal subjects (especially the higher percentage of preverbal lexical ones) in this task over the other two oral tasks. When comparing tables 4.57 - 4.59., one notices that the retelling of the frog story has the highest percentages of overt preverbal pronominal and lexical subjects among all the oral tasks. In the frog story task, the high percentages of preverbal subjects suggest that the [- strong] verbal value in T seems to be getting stronger in the two monolingual groups. It is noteworthy pointing out that the group from El Cibao seems to have either adopted the [- strong] verbal values in T with pronominal subjects, or that they are undergoing a cliticization process with pronominal subjects. The Santo Domingo group shows closer percentages of preverbal pronominal and lexical subjects than the El Cibao group. In the three oral tasks, the Santo Domingo group shows a lower percentage of preverbal pronominal subjects and a higher

percentage of preverbal lexical ones than the speakers from El Cibao. Specifically, in the three oral tasks (i.e., in interrogative and in declarative sentences), the El Cibao group shows a higher percentage of preverbal pronominal subjects (even in the frog story, they produced all the pronominal subjects preverbally –100 %-) and a lower percentage of preverbal lexical subjects than the group from Santo Domingo. These results indicate that El Cibao group is moving towards the [- strong] nominal value in T with pronominal subjects, or that they are becoming clitics of the verb. Therefore, my hypothesis cannot be completely confirmed, since the [- strong] value in T cannot be assured in any of the two monolingual groups. But it could be suggested that, while in El Cibao a process of cliticization may be taking place, in Santo Domingo a loss of the [+ strong] verbal value in T could be taking place.

A comparison of the results from the three oral tasks (tables 4.57. – 4.59.) with the GJ tasks (tables 4.5. – 4.7.), in regards to the acceptance of preverbal pronominal and lexical subjects, provides a better understanding of how subjects are represented in the minds of the monolingual speakers. Before comparing tables 4.57. – 4.59 and tables 4.5. – 4.7., it is noteworthy observing the statistical significance of the variables analyzed. Only statistically significant data will be compared.

In the GJ tasks, in the A-test, only the Santo Domingo data with respect to the selection of pronominal and lexical selection of subjects is statistically significant. In the B-test, the two monolingual groups provide statistically significant data, but only with pronominal subjects, and not with lexical ones. Finally, in the C-test, all the data provided by the two monolingual groups, in any form (pronominal or lexical) is statistically significant. In the three oral tasks, the two groups of monolingual participants are

statistically significant. But, in the role-play and in the personal story, if the subject is a pronoun or a lexical DP is not significant, whereas in the frog story, only lexical subjects are statistically significant (*p* value is of .034), but not pronominal subjects. Consequently, in the oral tasks, I will only refer to the use of lexical subjects in the frog story task.

I compare now the statistically significant data of the two GJ tasks testing interrogative sentences in regard to the pronominal or lexical nature of subjects, as observed in the two monolingual groups.[181] In the A-test, the Santo Domingo group shows a higher percentage of preverbal lexical subjects (73.3%) than preverbal pronominal ones (55.6%).[182] In the B-test, the Santo Domingo group selected a higher percentage of preverbal pronominal subjects (57.0%) than the group from El Cibao (39.5%).[183] The statistically significant data from the A-test and B-test show that the group from Santo Domingo has a high acceptance of preverbal lexical subjects in the A-test (73.3%). Furthermore, the Santo Domingo's percentage of preverbal pronominal subjects is similar in the A-test and B-test (55.6% and 57.0%, respectively). These data demonstrate that the Santo Domingo group seems to maintain a similar percentage of preverbal pronominal subjects in interrogatives, irrespectively of the GJ task (A-test or B-test), i.e., irrespectively of the number of possible choices in the task. Recall that in the A-test, preverbal and postverbal subjects were the only possible selections, but in the B-test the selection of subjects also included null subjects.

---

[181] The role-play task is not statistically significant with respect to the pronominal or lexical nature of subjects.
[182] El Cibao group does not have statistically significant data in the A-test.
[183] In the B-test, only the selection of pronominal subjects is statistically significant.

In sum, the Santo Domingo group seems to have set a specific representation of subjects in interrogative sentences. In regard to declarative sentences, in the C-test, the two monolingual groups (El Cibao and Santo Domingo) have a higher percentage of preverbal lexical subjects (61.0% and 87.7%, respectively) than pronominal ones (55.4% and 76.4%, respectively). In the oral tasks, only the frog story task provides statistically significant data with the use of lexical subjects. In the frog story task, the Santo Domingo group also shows a higher percentage of preverbal lexical subjects (84.7%) than the group from El Cibao (74.8%). In declarative sentences, the percentage of preverbal lexical subjects in the C-test and in the frog story task demonstrate that the participants from Santo Domingo also show a similar percentage of preverbal lexical subjects in tasks testing their competence (C-test) and their performance (frog story). These results confirm what was also found in interrogative sentences. Specifically, the Santo Domingo group presents a stable representation of subjects, which is observed in the similar percentages of preverbal pronominal and lexical subjects as evidenced in the tasks testing their competence and performance with respect to interrogative and declarative sentences.

After reviewing the production of preverbal pronominal and lexical subjects in the three oral tasks, I present now the production of postverbal pronominal and lexical subjects in declarative and interrogative sentences. In my sixth hypothesis, I proposed that if the DS monolingual speakers still have available the [+ strong] verbal features in T, then I should find postverbal subjects, irrespective of their pronominal or lexical nature. Tables 4.60., 4.61., and 4.62. present the production of postverbal pronominal and

lexical subjects in the three oral tasks. After presenting these three tables, a comparison with the GJ results will be made, i.e., a comparison with tables 4.8. – 4.10.

In table 4.60., one can observe the cross-tabulation of speakers from El Cibao and Santo Domingo according to the oral production of postverbal pronominal and lexical subjects in interrogative sentences (in the role-play task). Table 4.60. presents all types of subjects used in the role-play task. They are distributed according to their position (preverbal or postverbal) or to their null form. The cells in gray mark the postverbal production of overt pronominal and lexical subjects. These are the only subjects analyzed to address my hypothesis.

Table 4.60.: Cross-tabulation of speakers from El Cibao and Santo Domingo with regard to postverbal pronominal and lexical subjects in interrogatives – Role-play (N = 774)

Role-play		**Null**	**Preverbal**	**Postverbal**	**Total per pron/lex**
El Cibao	**Null**	N = 114 100.0%	-	-	N = 114 100.0%
	Pronominal	-	N = 127 76.5%	N = 39 23.5%	N = 166 100.0%
	Lexical DP	-	N = 59 57.8%	N = 43 42.2%	N = 102 100.0%
	Total per position	N = 114 29.8%	N = 186 48.7%	N = 82 21.5%	N = 382 100.0%
Santo Domingo	**Null**	N = 105 100.0%	-	-	N = 105 100.0%
	Pronominal	-	N = 181 72.1%	N = 70 27.9%	N = 251 100.0%
	Lexical DP	-	N = 24 66.7%	N = 12 33.3%	N = 36 100.0%
	Total per position	N = 105 26.8%	N = 205 52.3%	N = 82 20.9%	N = 392 100.0%

El Cibao: Chi-square: *396.771* *p=<.000>*
Santo Domingo: Chi-square: *392.625* *p=<.000>*

As the gray cells in table 4.60. illustrate, in the oral production of interrogative sentences in the role-play task, the postverbal production of lexical subjects by the groups from El Cibao and Santo Domingo is higher (42.2% and 33.3% respectively) than their postverbal

production of pronominal subjects (23.5% and 27.9%). Comparing the two monolingual groups, out of all the pronominal subjects produced by the participants from El Cibao, 23.5% of them are postverbal, whereas the Santo Domingo group produced a slightly higher percentage of postverbal pronominal subjects (27.9%). Unlike the pronominal use of subjects, the speakers from El Cibao produced more postverbal lexical subjects (42.2%) than the Santo Domingo participants (33.3%), and both monolingual groups are statistically significant (*p* value is of .000). Therefore, my hypothesis is partially confirmed, since the [+ strong] verbal value in T can be observed in both monolingual groups and with pronominal and lexical subjects, but this value ([+ strong] verbal in T) is more clearly noticed with lexical DPs than with pronominal ones.

Comparing these results with the B-test ones -in table 4.9. - (GJ where preverbal, postverbal and null subjects were available), in the B-test, the participants from El Cibao have a higher percentage of postverbal pronominal subjects than postverbal lexical ones (60.5% and 48.9%, respectively). On the other hand, the Santo Domingo participants show a higher percentage of postverbal lexical subjects than postverbal pronominal ones (50.9% and 43.0%, respectively). These results demonstrate that the two monolingual groups exhibit different patterns in the postverbal position of pronominal and lexical subjects in interrogative sentences (in the B-test and in the role-play). The Santo Domingo group seems to exhibit evidence of a similar linguistic representation in the task testing their competence (B-test) and in that testing their performance (role-play). El Cibao participants seem to have a different representation in the task testing their competence (B-test) and in the task testing their performance (role-play task), with respect to the postverbal position of pronominal and lexical subjects. The similar results

obtained from the Santo Domingo participants in both types of tasks (those testing their competence and those testing their performance) suggest that the Santo Domingo participants may have an established and fixed pattern for the postverbal position of subjects in interrogative sentences, whereas the El Cibao participants do not.

In table 4.61., one can observe the cross-tabulation of the two groups of monolingual DS speakers, according to their production of postverbal subjects in the narration of the personal story, i.e., in the oral production of declarative sentences. As in table 4.60., in table 4.61. the overt production of preverbal and postverbal subjects is presented, although in this section I will refer only to the postverbal production of them (cells in gray).

Table 4.61.: Cross-tabulation of speakers from El Cibao and Santo Domingo with regard to postverbal pronominal and lexical subjects in statements – Personal Story (N = 1956)

Personal story		**Null**	**Preverbal**	**Postverbal**	**Total per pron/lex**
El Cibao	**Null**	N = 555 100.0%	-	-	N = 555 100.0%
	Pronominal	-	N = 239 94.1%	N = 15 5.9%	N = 254 100.0%
	Lexical DP	-	N = 102 69.4%	N = 45 30.6%	N = 147 100.0%
	Total per position	N = 555 58.1%	N = 341 35.7%	N = 60 6.2%	N = 956 100.0%
Santo Domingo	**Null**	N = 487 100.0%	-	-	N = 487 100.0%
	Pronominal	-	N = 357 90.2%	N = 39 9.8%	N = 396 100.0%
	Lexical DP	-	N = 90 76.9%	N = 27 23.1%	N = 117 100.0%
	Total per position	N = 487 48.7%	N = 447 44.7%	N = 66 6.6%	N = 1000 100.0%

El Cibao: Chi-square: *1062.496* *p=<.000>*
Santo Domingo: Chi-square: *1027.482* *p=<.000>*

As presented in the gray cells in table 4.61., in the oral production of declarative sentences in the narration of the personal story, the percentage of postverbal lexical subjects is much higher than the pronominal one in both groups. Specifically, El Cibao group produced 30.6% of the lexical subjects in postverbal position, and the Santo Domingo group produced a slightly lower percentage (23.1%) than the El Cibao group. On the other hand, the postverbal production of pronominal subjects is very low in both monolingual groups. Specifically, one finds 5.9% in the case of the El Cibao group, and 9.8% in the case of the Santo Domingo participants.[184] The low percentage of postverbal pronominal subjects (especially among the participants from El Cibao) in the oral production of declarative sentences could suggest that pronominal subjects are behaving different from lexical subjects, in declarative sentences. There is a tendency to have pronominal subjects linked to the verb in preverbal position, as if they were clitics of the verbs; but lexical subjects cannot be cliticizaded to the verb. The possibility of having pronominal subjects as clitics of the verb was already suggested by scholars such as Lipski (1977) and Ordóñez and Olarrea (2006), who propose that pronominal subjects are bound to the verb. My hypothesis is again partially confirmed in the personal story task, since the [+ strong] value in T is observed in both groups, although this value seems to affect differently pronominal and lexical subjects. For instance, this pattern is more evident in lexical subjects than in pronominal ones.

The comparison of these results (from oral tasks) with the ones in the C-test (table 4.10.) shows that the task presents different results concerning the postverbal position of subjects. The results in the C-test and in the personal story provide evidence from

[184] The two monolingual groups are statistically significant (*p* value is of .000), as observed in the *p* values under Table 4.61.

competence tests and performance tasks of [+ strong] verbal values in T with pronominal and lexical subjects. But, in performance tasks some restrictions seem to apply to the pronominal subjects, since the percentage of postverbal pronominal subjects is very low. The latter statement supports the possibility that pronominal subjects are undergoing a process of cliticization, as suggested in previous results.

Finally, in table 4.62., I present the percentages of pronominal and lexical subjects in the frog story task by the two groups of monolingual DS participants according to their position (preverbal or postverbal). Even though null subjects are presented in table 4.62., I only analyze postverbal subjects, since my hypothesis only refers to postverbal subjects.

Table 4.62.: Cross-tabulation of speakers from El Cibao and Santo Domingo with regard to postverbal pronominal and lexical subjects in declaratives – Frog Story (N = 594)

Frog story		**Null**	**Preverbal**	**Postverbal**	**Total per pron/lex**
El Cibao	**Null**	N = 123 100.0%	-	-	N = 123 100.0%
	Pronominal	-	N = 17 100.0%	N = 0 .0%	N = 17 100.0%
	Lexical DP	-	N = 116 74.8%	N = 39 25.2%	N = 155 100.0%
	Total per position	N = 123 41.7%	N = 133 45.1%	N = 39 13.2%	N = 295 100.0%
Santo Domingo	**Null**	N = 127 100.0%	-	-	N = 127 100.0%
	Pronominal	-	N = 27 96.4%	N = 1 3.6%	N = 28 100.0%
	Lexical DP	-	N = 122 84.7%	N = 22 15.3%	N = 144 100.0%
	Total per position	N = 127 42.5%	N = 149 49.8%	N = 23 7.7%	N = 299 100.0%

El Cibao: Chi-square: *304.488* *p=<.000>*
Santo Domingo: Chi-square: *303.821* *p=<.000>*

As observed in the gray cells in table 4.62., in the frog story task, the production of postverbal pronominal subjects is rare (only one instance, among the forty monolingual

participants), whereas the percentage of postverbal lexical ones is much higher among the two monolingual groups. In regard to the nature of the subjects, out of the total amount of pronominal subjects produced in the frog story task by the participants from El Cibao, none of them was postverbal (0.0%), whereas the Santo Domingo group produced a slightly higher percentage of postverbal pronominal subjects (3.6%). On the other hand, the speakers from El Cibao produced a higher percentage of postverbal lexical subjects than the Santo Domingo group (25.2% and 15.3%, respectively).[185] Similarly to the personal story task, in the frog story task the percentage of postverbal lexical subjects is higher than the percentage of postverbal pronominal subjects. In the frog story task, the incidence of the postverbal production is practically non-existent in any of the two monolingual groups. The results from the two oral tasks testing the participants' performance in declarative sentences (personal story and frog story) demonstrate that the [+ strong] verbal value in T affects differently pronominal and lexical subjects. For instance, in the frog story task pronominal subjects seems to be undergoing a cliticization process, which explains the higher preference for preverbal subjects.

As mentioned above, the percentage of postverbal pronominal subjects is high in the C-test, in which the participants' competence is being studied. Furthermore, the different percentages of postverbal pronominal subjects in the tasks testing their competence and in those testing their performance indicate that the position of pronominal subjects is affected by the task. Specifically, in the tasks studying their competence, there is evidence of the [+ strong] verbal features in T, whereas in the ones examining their performance the evidence becomes scare. Lexical subjects do not seem

[185] It is worth mentioning that the two monolingual groups are statistically significant in the frog story task (*p* value is of .000), as observed in the *p* values under Table 4.62.

to show such a clear difference between the results of tasks testing competence and those testing performance.

In interrogative sentences, pronominal subjects may be undergoing a cliticization process, which may show first in tasks testing performance and later in tasks testing their competence. But in the case of lexical subjects, the apparent loss of the [+ strong] verbal values in T may show similarly in competence and performance tasks. It could also be suggested that the loss of the strength value may become evident similarly in competence and performance tasks; whereas the cliticization process may become evident first in performance tasks and later in competence tasks.

In general, in the two oral tasks eliciting subjects in declarative sentences (narration of a personal story and retelling a frog story), the overt production of postverbal lexical subjects surpasses the production of postverbal pronominal ones. In these two oral tasks (personal story and frog story), the monolingual DS speakers from El Cibao have a lower production of postverbal pronominal subjects than the Santo Domingo group. The low percentage of postverbal pronominal subjects suggests that pronominal subjects may be undergoing a cliticization process (i.e., the pronominal subject and the verb seem to form one unit), as it was previously proposed (Lipksi, 1977; Ordóñez and Olarrea, 2006). But this cliticization process is mainly observed in the tasks testing the participants' performance, but it is not so clearly noticed in the tasks testing their competence. Perhaps, the prescriptive values of language may be interfering with the participants' answers in the competence tasks, but not with their oral production in the performance tasks.

4.3.2.2. Subject-verb inversion (Age): Results by the monolinguals from El Cibao

In this section, the subject-verb inversion property is studied in regard to the age of the El Cibao participants. I hypothesized that if the speakers from El Cibao are undergoing a process of parametric change, then I should find that the older participants show more null, postverbal, and expletive subjects than the younger ones, as well as higher percentage of violations of the *that*-trace filter. In this part of the chapter, where I present the results obtained from the oral tasks, I will not address a part of this hypothesis (expletives and *that*-trace), due to the low rate of expletive and *that*-trace instances in the oral tasks.

Table 4.63. presents the production of null, preverbal, and postverbal subjects according to the age of the participants from El Cibao, in the oral role-play task. Since the hypothesis being analyzed addresses null and postverbal subjects (cells in gray in table 4.61.), these subjects are the main focus of the discussion.

Table 4.63.: Cross-tabulation of speakers from El Cibao with regard to null subjects, preverbal and postverbal subjects according to age in interrogatives – Role-Play (N = 382)

Role-play	Null	Preverbal	Postverbal	Total per age
Age 18-29	N = 25 31.2%	N = 43 53.8%	N = 12 15.0%	N = 80 100.0%
Age 30-39	N = 43 39.4%	N = 46 42.2%	N = 20 18.4%	N = 109 100.0%
Age 40-50	N = 12 20.0%	N = 36 60.0%	N = 12 20.0%	N = 60 100.0%
Age over 50	N = 34 25.5%	N = 61 45.9%	N = 38 28.6%	N = 133 100.0%
Total subjects	N = 114 29.8%	N = 186 48.7%	N = 82 21.5%	N = 382 100.0%

Chi-square: *14.585* *p=<.024>*

As presented in the last row in table 4.63., the El Cibao participants produced a higher percentage of preverbal subjects (48.7%) than postverbal (21.5%) and null ones (29.8%)

in the role-play task, i.e., eliciting interrogative sentences. The statistical value of the variables analyzed in this table is significant (*p* value is of .024). The following figure (4.6.) presents the percentage of postverbal and null subjects among the different age groups of the El Cibao participants, in the role-play task; i.e., it represents the gray cells in table 4.63.

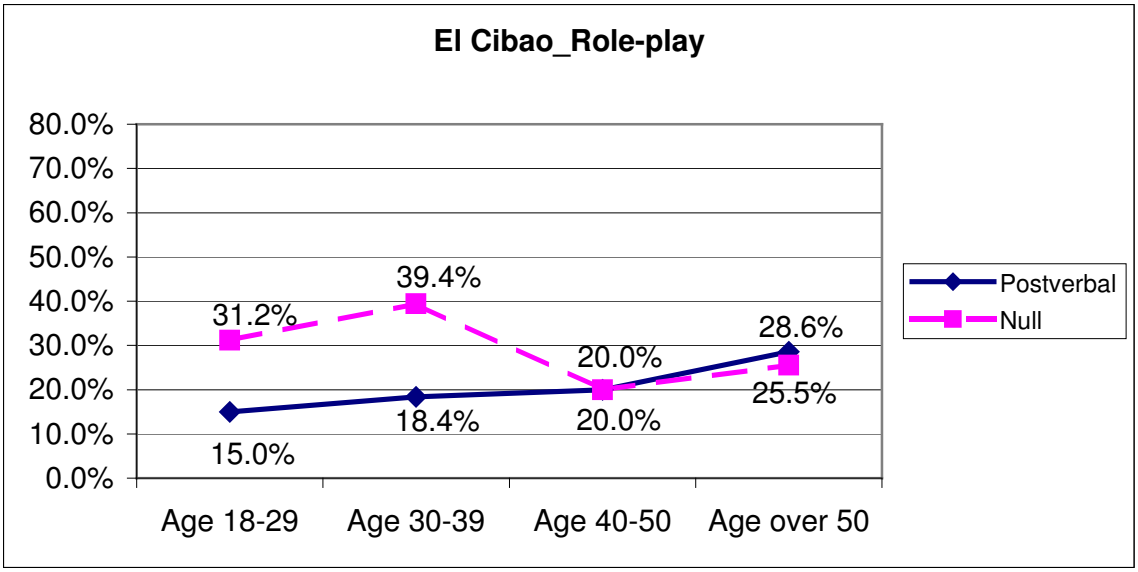

Figure 4.6.: Postverbal and null subjects in interrogative sentences (role-play) by the participants from El Cibao, according to their age-range.

Starting with the production of postverbal subjects in the role-play task, one observes that the postverbal subjects show a decrease along with age in El Cibao group. That is, the participants over 50 prefer more postverbal subjects (28.6%), than the participants in between 40 and 50 (20.0%), and these latter groups produced more postverbal subjects than the group between 30 and 39 (18.4%). Finally, the lowest percentage of postverbal subjects (15.0%) is produced by the youngest group (age 18-29). There is an apparent loss of the mechanisms that trigger the postverbal position of subjects in the production of interrogative sentences among the younger participants. There is evidence from the oral production of interrogative sentences that the [+ strong] verbal values in T are

disappearing among the newer generations. My hypothesis is confirmed with respect to the postverbal use of subjects.

In the comparison of the results obtained in the role-play task (table 4.63., above) with the ones gathered in the B-test (table 4.18.), three main tendencies appeared. First, the percentages of postverbal subjects in the B-test are higher than in the role-play task. That is, more postverbal subjects are found in the task testing their competence than in the task testing their performance in interrogative sentences. Second, in both tasks the lowest percentages of postverbal subjects are found among the youngest group of participants (age range 18 – 29). This could suggest that the mechanisms that allow the postverbal position of subjects in interrogative sentences are being lost among the younger participants from El Cibao. Third, the participants from El Cibao show a similar pattern in the B-test and in the role-play where postverbal subjects decrease with age. However, the percentages of postverbal subjects are higher in the B-test than in the role-play. In sum, the postverbal position of subjects in interrogative sentences seems to be influenced by the age of the participants and the type of task (measuring their competence or their performance). A higher percentage of postverbal subjects is found in the task measuring the participants' competence, and among the older participants. That is, the younger the participants are, the lower the percentage of postverbal subjects tends to be.

My hypothesis also refers to the percentage of null subjects. As observed in figure 4.6., the percentage of null subjects does not show a clear-cut tendency, i.e., the loss of the null subject property does not show a progression along with the participants' age. The youngest group of participants (age 18 - 29) has a percentage of 31.2% null subjects, and the participants in the age range above them, i.e. between ages 30 – 39, show a

slightly higher rate of null subjects (39.4%). This latter group has the highest percentage of null subjects among all the El Cibao participants. Oppositely, the lowest percentage of null subjects is found among the participants in the 40 - 50 age range (20.0%). Finally, the oldest group of participants produced 25.5% of their verbs with null subjects in the role-play task. This may suggest that the null subject property is available in all age-ranges in the oral production of interrogative sentences, i.e., all participants appear to have the [+ strong] nominal values in Agr.

If we compare these results with the ones obtained in the B-test (table 4.17.), a better understanding of the participants' competence and their performance is obtained. In the B-test, there is a tendency to select a lower percentage of null subjects among the older participants; i.e., the older the participants are, the lower the percentage of null subjects is. After observing the results from the B-test and from the role-play task with respect to the null subject property, two main tendencies are observed. In the two tasks, the group of participants between 30–39 shows the highest percentage of null subjects in both tasks. Perhaps, this age group is more sensitive to prescriptive language than the other groups. Secondly, the two older groups (age 40 – 50, and over 50) have the lowest percentages of null subjects in the tasks testing their competence and in those testing their performance; i.e., overt subjects are preferred by the older participants. These results suggest that the [+ strong] nominal features in Agr are not lost among the younger participants. Consequently, my hypothesis is not validated with respect to the null subject property, since the older the participants are, the lower the percentage of null subjects is.

In the oral production of declarative sentences, the use of preverbal, postverbal, or null subjects is presented in tables 4.64. and 4.65. below. Table 4.64. presents the cross-

tabulation of the participants' age with the null, preverbal, or postverbal position of subjects in the oral production of declaratives in the personal story task. Since the hypothesis under consideration only refers to null and postverbal subjects (cells in gray) according to the participants' age, these are the only data discussed below.

Table 4.64.: Cross-tabulation of speakers from El Cibao with regard to null subjects, pre and postverbal subjects according to age in declaratives - Personal Story (N = 956)

Personal story	**Null**	**Preverbal**	**Postverbal**	**Total**
Age 18-29	N = 111 55.5%	N = 84 42.0%	N = 5 2.5%	N = 200 100.0%
Age 30-39	N = 148 57.8%	N = 97 37.9%	N = 11 4.3%	N = 256 100.0%
Age 40-50	N = 93 62.0%	N = 45 30.0%	N = 12 8.0%	N = 150 100.0%
Age over 50	N = 203 58.0%	N = 115 32.9%	N = 32 9.1%	N = 350 100.0%
Total subjects	N = 555 58.0%	N = 341 35.7%	N = 60 6.3%	N = 956 100.0%

Chi-square: *16.794* *p=<.010>*

In general, in the narration of the personal story (as observed in table 4.64.), the El Cibao participants preferred null subjects (58.0%) over preverbal (35.7%) or postverbal ones (6.3%). Statistically, the data observed in table 4.64. is significant (*p* value is of .010). My hypothesis refers to the effect that the age of the participants has over two different properties: phonologically null subjects and subject-verb inversion. Figure 4.7. illustrates the distribution of the null and postverbal percentages in the different age-ranges, in the personal story task.

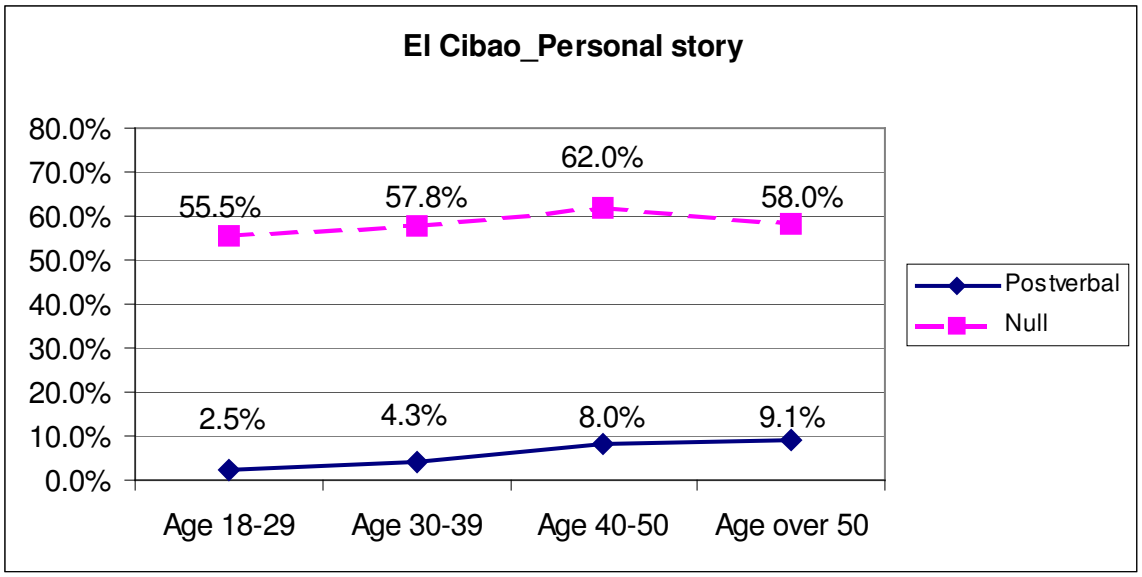

Figure 4.7.: Postverbal and null subjects in declarative sentences (personal story) by the participants from El Cibao, according to their age-range.

A general pattern can be found when the postverbal position of subjects among the different age-ranges is observed: the percentage of postverbal subjects increases as the participants' age increases, as illustrated in figure 4.7. Specifically, the older the participants are, the higher the percentage of postverbal subjects is. However, the percentages of postverbal subjects are low (below 10.0%). For instance, the younger participants only produced 2.5% postverbal subjects. These results suggest that the younger participants seem to be losing the [+ strong] verbal features in T. This tendency may be caused by different factors: they have a preference for the [- strong] verbal values in T, their subjects are becoming clitics, or the discursive and pragmatic value of the preverbal and postverbal subjects is lost.

If the results from the personal story task are compared with the results from the C-test (table 4.19.), one can find that the percentages of postverbal subjects in the C-test are higher than the rate of postverbal subjects in the personal story task. This indicates that El Cibao speakers have the [+ strong] verbal values in T in their competence, but in

tasks testing their performance, postverbal subjects are rarely used. In the C-test, the two younger groups of speakers (age 18 – 29 and age 30 – 39) have a lower percentage of postverbal subjects than the older participants. In these two tasks, i.e., in the C-test (competence) and in personal story task (performance), the percentage of postverbal subjects in declarative sentences is smaller among the younger participants than among the older ones. These results confirm my hypothesis with respect to postverbal subjects, since the older participants have a tendency to prefer a higher rate of postverbal subjects than the younger ones.

With respect to the second part of my hypothesis, i.e., the one that refers to the production of null subjects according to the age of the El Cibao participants; it can be observed that the percentages of null subjects in the personal story task are similar across all age groups. For instance, the youngest group of participants (age 18 – 29) has the lowest percentage of null subjects (55.5%). The following age group (30 - 39) has a slightly higher percentage of null subjects (57.8%). The participants between 40 and 50 present the highest percentage of null subjects (62.0%), whereas the oldest group (over 50) has a slightly lower percentage of null subjects (58.0%). My hypothesis is confirmed if the four age groups are divided into the two younger groups (age 18 – 29, and age 30 – 39), and the two older groups (age 40 – 50, and over 50). That is, my hypothesis is confirmed since the older groups show a higher percentage of null subjects than the younger groups.

If one compares the results from the personal story task with the ones from the C-test (table 4.17.), the percentages of null subjects in the personal story task are higher than the percentages of null subjects in the C-test. This difference suggests that, although

the participants from El Cibao have [+ strong] nominal values in Agr, null subjects are accepted differently in the tasks that test their competence (C-test) and in one that tests their performance (personal story). Perhaps, prescriptive grammar affects differently the acceptance of null subjects in these two types of tasks (examining their competence and their performance). My hypothesis was not confirmed in the C-test; i.e., there was not a clear tendency to have higher percentages of null subjects among the older groups.

Table 4.65. presents the oral production of subjects in declarative sentences, in the most guided oral production task, i.e., the frog story task. The cells in gray mark the preference for null and postverbal subjects in the frog story task. Since my hypothesis relates to these two properties, these are the only ones being discussed below.

Table 4.65.: Cross-tabulation of speakers from El Cibao with regard to null subjects, pre and postverbal subjects according to age in declaratives – Frog-Story (N = 295)

Frog story	Null	Preverbal	Postverbal	Total per age
Age 18-29	N = 32 53.3%	N = 21 35.0%	N = 7 11.7%	N = 60 100.0%
Age 30-39	N = 35 38.9%	N = 44 48.9%	N = 11 12.2%	N = 90 100.0%
Age 40-50	N = 15 33.3%	N = 23 51.1%	N = 7 15.6%	N = 45 100.0%
Age over 50	N = 41 41.0%	N = 45 45.0%	N = 14 14.0%	N = 100 100.0%
Total	N = 123 41.7%	N = 133 45.1%	N = 39 13.2%	N = 295 100.0%

Chi-square: *5.299* *p=<.506>*

In the frog story task, as presented in the last row of table 4.65., postverbal subjects are least used (13.2%), followed by null subjects (41.7%), and the preferred subjects are preverbal ones (45.1%). In this table, the variables under study are not statistically significant, i.e., the preference for preverbal, postverbal, or null subjects and the age range of the El Cibao participants are not correlated.). Some other variables may be intervening in the election of subjects (preverbal, postverbal, or null). Although, a

description of the percentages is presented, no discussion will be provided, since the *p* value indicates that the data in table 4.65. are not significant. In regard to postverbal subjects, the two younger groups have the two lowest percentages of postverbal subjects (11.7% and 12.2%), whereas the two older groups have the highest percentage of postverbal subjects (15.6% and 14.0%). Although the high *p* value indicates that the subject selection by each age-group could have been due to chance.

4.3.2.3. Subject-verb inversion (Levels of education): Results by the monolinguals from Santo Domingo

In the case of the monolingual speakers from Santo Domingo, I hypothesized that if the educational level influences the four properties of the *pro*-drop parameter, then the speakers with higher levels of education will show more null and postverbal subjects, less overt expletives, and more violations of the *that*-trace filter than the participants with lower educational levels. In this section, the part of the hypothesis that refers to the use of expletives and *that*-trace constructions is not addressed, due to the low number of instances of expletives and *that*-trace constructions obtained in the oral tasks. Tables 4.66., 4.67., and 4.68. present the subject preference (null, preverbal, or postverbal) in the three oral production tasks.

In table 4.66. I present the cross-tabulation of the Santo Domingo participants with regard to null, preverbal, and postverbal subjects according to their level of education in the role-play task (interrogative sentences). My hypothesis addresses only the participants' preference for postverbal and null subjects (cells in gray). The discussion below focuses on these data.

Table 4.66.: Cross-tabulation of speakers from Santo Domingo with regard to null subjects, pre and postverbal subjects according to level of education in interrogatives – Role-Play (N = 392)

Role-play	Null	Preverbal	Postverbal	Total per education level
Elementary (finished or not)	N = 35 37.3%	N = 38 40.4%	N = 21 22.3%	N = 94 100.0%
Secondary and vocational	N = 25 20.9%	N = 70 58.3%	N = 25 20.8%	N = 120 100.0%
University (finished or ongoing)	N = 45 25.3%	N = 97 54.5%	N = 36 20.2%	N = 178 100.0%
Total	N = 105 26.8%	N = 205 52.3%	N = 82 20.9%	N = 392 100.0%

Chi-square: *17.285* *p=<.002>*

As observed in the last row in table 4.66., in the role-play task, the Santo Domingo participants (of all educational levels) preferred preverbal subjects (52.3%). This preference for preverbal subject is followed by their acceptance for null subjects (26.8%), and finally postverbal subjects are the least preferred subjects (20.9%). Although the numbers in table 4.66. are not very high, the data are statistically significant (*p* value is of .002). I present first the distribution of null subjects according to their educational level, and second the production of postverbal subjects, in the role-play task, in order to address my hypothesis.

The participants with the lowest educational level (elementary education) show the highest percentage of null subjects (37.3%), followed by the participants with university education (25.3%), and finally, the lowest percentage of null subjects is found among the participants who reached up to secondary and vocational school. These data disconfirm my hypothesis with respect to null subjects. The participants with high levels of education did not produce the highest percentage of null subjects. Oppositely, the

participants with the lower educational level have the highest percentage of null subjects. These results suggest that the educational level does not seem to influence the null subject property in the production of interrogative sentences, i.e., in their performance.

The comparison of the data from the role-play task (table 4.66.) with the data obtained in the B-test (table 4.23.) shows that the educational level of the Santo Domingo participants seems to influence the acceptance of null subjects differently in both tasks (in the B-test, and in the role-play). Specifically, in their competence in interrogative sentences (B-test), the participants with higher educational level appear to be more sensitive to the prescriptive acceptance of null subjects than the less educated people, although the percentages of null subjects among the three groups are close.[186] Oppositely, when measuring the Santo Domingo participants' performance in interrogative sentences, the educational level of the participants does not seem to influence their preference for null subjects. Therefore, my hypothesis is only confirmed for the null subject's property by the tasks that test the participants' competence, but not in those that test their performance. Specifically, the higher educated participants in Santo Domingo show a higher percentage of null subjects than the less educated ones only in the B-test, i.e., only in the task analyzing their competence in interrogative sentences, but not in the role-play task.

With respect to postverbal subjects in the role-play task, the highest percentage of postverbal subjects was produced by the participants with elementary education (22.3%), followed by the participants with secondary and vocational education (20.8%), and, finally, the lowest percentage of postverbal subjects is produced by the participants with

[186] In the B-test (which measures the participants' competence), the highest percentage of null subjects is selected by the participants with university education (33.3%), followed by those with secondary and vocational school (29.6%), and finally by the elementary education participants (28.4%).

university education (20.2%). Therefore, my hypothesis is not confirmed with respect to postverbal subjects, since the highest percentage of postverbal subjects is found among the participants with the lowest educational level. These results suggest that, in their performance (in interrogative sentences), the Santo Domingo participants with the lower educational level may be trying to imitate more consciously the prescriptive grammar of language than the participants with higher educational level.

When comparing the role-play results with the ones from the B-test (which analyze their competence) in table 4.23., one common feature is found: the participants with the highest educational level (university education) have the lowest percentages of postverbal subjects. Therefore, my hypothesis is not confirmed with respect to postverbal subjects, since the participants with the highest educational level have the lowest percentages of postverbal subjects in the tasks that test their competence (B-test), and their performance (role-play) in interrogative sentences. These results show that the selection of postverbal subjects is not influenced by the educational level of the Santo Domingo participants, i.e., they may not be influenced by any prescriptive rules.

In the next table, I focus on the use of subjects in declarative sentences. Specifically, table 4.67. presents the percentage of null, preverbal, and postverbal subjects in the personal story task according to the level of education of the Santo Domingo speakers. This table refers also to the hypothesis that proposed that if the educational level influences two *pro*-drop properties (specifically null and postverbal subjects), then the participants with higher levels of education should have more null and postverbal subjects than the participants with lower educational levels. Since my

hypothesis only refers to null and postverbal subjects (cells in gray), these are the main focus of my discussion below.

Table 4.67.: Cross-tabulation of speakers from Santo Domingo with regard to null subjects, pre and postverbal subjects according to level of education in statements - Personal Story (N = 1000)

Personal story	**Null**	**Preverbal**	**Postverbal**	**Total**
Elementary (Finished or not)	N = 116 46.4%	N = 119 47.6%	N = 15 6.0%	N = 250 100.0%
Secondary and vocational	N = 127 42.3%	N = 149 49.7%	N = 24 8.0%	N = 300 100.0%
University (Finished or ongoing)	N = 244 54.2%	N = 179 39.8%	N = 27 6.0%	N = 450 100.0%
Total	N = 487 48.7%	N = 447 44.7%	N = 66 6.6%	N = 1000 100.0%

Chi-square: *11.296* *p=<.023>*

As illustrated in the last row of table 4.67., the Santo Domingo speakers have a general preference for null subjects (48.7%) in the oral narration of a personal story. The second preferred subjects are preverbal ones (44.7%), whereas postverbal subjects present the lowest percentage (6.6%). As observed in the *p* value under table 4.67., the data presented in this table is statistically significant (*p* value is of .023), although some other variables may be influencing these results, as I explain below. In the next two paragraphs I analyze each one of the gray columns in table 4.67.

The highest percentage of null subjects in the personal story task is found among the speakers with university education (54.2%), followed by the participants with the lowest educational level, i.e., elementary education (46.4%). Finally, the lowest percentage of null subjects was produced among the participants with secondary and vocational education (42.3%). These data suggest that in the personal story task, the

educational level of the Santo Domingo participants does not seem to be influencing directly the option of having null subjects in the oral production of declarative sentences. Consequently, my hypothesis is partially confirmed with respect to null subjects, since no exact correlation can be found between the educational level of the Santo Domingo speakers and the null subject percentage. Some other variables may be influencing the percentage of null subjects, as observed in the *p* value (*p* value is of .023).

A comparison of the results obtained in the personal story task and in the C-test (see table 4.24.) will provide a broader view of the null subject property in declarative sentences, according to the educational level of the Santo Domingo participants. In the C-test (*p* value is of .017), the two groups with the lowest educational level (elementary and secondary-vocational) have the highest percentages of null subjects (38.1% and 38.2%, respectively), and the participants with university education have the lowest percentage of null subjects (29.4%). But in the personal story task (*p* value is of .023), there is not a direct correlation between the null subject percentages and the educational level of the participants. Based on the statistical significance of the variables analyzed, in declarative sentences, the null subject property does not seem to be influenced by the educational level of the Santo Domingo participants.

In regard to the second *pro*-drop property, the monolingual speakers from Santo Domingo, irrespective of their level of education, produce similar percentages of postverbal subjects in the personal story task (in between 6.0% and 8.0%). The participants with university education and the participants with the lowest educational level (elementary education) have the lowest percentages of postverbal subjects (6.0%), and the speakers with secondary and vocational education have a slightly higher

percentage of postverbal subjects (8.0%). These results disconfirm my hypothesis, since a higher educational level is not correlated with a higher percentage of postverbal subjects. Furthermore, these similar percentages of postverbal subjects indicate that the educational level of the Santo Domingo participants does not seem to influence the production of postverbal subjects. This is also suggested in the *p* value of table 4.66. (*p* value is of .023).

A contrast of the results in the personal story task (table 4.67.) and in the C-test (see table 4.24.) shows that all the educational level groups present higher percentages of postverbal subjects in the C-test[187] than in the personal story task. Furthermore, the participants with secondary and vocational education have the highest percentages of postverbal subjects. These results indicate that the participants with secondary education seem to be more sensitive to prescriptive uses of language. But other variables may be influencing the postverbal position of subjects, since the *p* values in each tasks are of .017 (C-test) and .023 (personal story task). Some of these other variables may be the pragmatic and discursive values attached to postverbal subjects. Since these variables are not investigated in this study, future research is recommended.

Finally, the data concerning the hypothesis that relates the percentages of null and postverbal subjects with the educational level of the Santo Domingo participants are presented in table 4.68. Table 4.68. shows a cross-tabulation of the use of subjects according to the level of education achieved by the monolingual participants from Santo Domingo, in the frog story task, i.e., in a more guided production of declarative

[187] Specifically, in the C-test, the highest percentage of postverbal subjects was found among the participants with secondary and vocational education (18.8%), followed by the participants with university education (13.6%), and finally, the lowest percentage of postverbal subjects is selected by the group with elementary education (10.3%). Therefore, in the C-test, my hypothesis is not confirmed, since the participants with the highest educational level do not select the highest percentage of postverbal subjects.

sentences. The difference between the frog story task and the personal story one is the level of guidance given to produce the task. In the frog story task, the production of sentences was guided by a series of pictures observed in a book (refer to chapter 3 for further information about the methodology used). Since the hypothesis being analyzed only refers to null and postverbal subjects (cells in gray), these types of subjects will be the main focus of the analysis.

Table 4.68.: Cross-tabulation of speakers from Santo Domingo with regard to null subjects, pre and postverbal subjects according to level of education in statements - Frog Story (N = 299)

Frog story	Null	Preverbal	Postverbal	Total
Elementary (Finished or not)	N = 30 40.5%	N = 37 50.0%	N = 7 9.5%	N = 74 100.0%
Secondary and vocational	N = 44 48.9%	N = 37 41.1%	N = 9 10.0%	N = 90 100.0%
University (Finished or ongoing)	N = 53 39.3%	N = 75 55.6%	N = 7 5.2%	N = 135 100.0%
Total	N = 127 42.5%	N = 149 49.8%	N = 23 7.7%	N = 299 100.0%

Chi-square: *5.299* *p=<.258>*

Two aspects should be considered before analyzing the results in table 4.68.: first, the statistical significance of the variables in table 4.68. (*p* value is of .258) indicates that there is not a correspondence between these variables; and second, the number of items (N = 299) produced in this task is low and, consequently, no generalizations can be made, although tendencies can be observed. Due to these two factors (lack of statistical significance, and low number of items analyzed), a brief reference to the results observed in table 4.68. will be given, but no discussion of the results will be provided. As observed in the last row of table 4.68., in the frog story task, the Santo Domingo speakers produced the highest percentage of subjects preverbally (49.8%), followed by null subjects

(42.5%), and finally, the lowest percentage of subjects are postverbal (7.7%). In regard to the educational level of the Santo Domingo speakers, the participants with secondary and vocational school have the highest percentages of null and postverbal subjects (48.9% and 10.0%, respectively). Perhaps, the participants with secondary and vocational education are more subject to normative pressure than the rest of the participants. But the high *p* value (*p* value is of .258) obtained in the cross-tabulation of the variables in table 4.68. indicates that these variables are not statistically significant, i.e., they are not correlated. Some of the variables that could be influencing the production of subjects are the story itself, where a variety of referents (animals and a person) appear. Specifically, the narration of the story required switching from one referent to another constantly, as well as referring to animal subjects. These two variables may have affected the selection of subjects. Nonetheless, further investigation is required.

4.3.3. Overt vs. null subjects: Results comparing the two monolingual groups and the bilingual group of DS students

In this section, I compare the results of the two monolingual groups of participants (El Cibao and Santo Domingo) and the bilingual one, in the oral production tasks (role-play, personal story, and frog story). Specifically, I refer to their preference for null or overt subjects in the oral production of the three tasks. In reference to that, I hypothesized that if the monolingual varieties (El Cibao and Santo Domingo) show a higher tendency to adopt the [- strong] nominal features in Agr and the [+ strong] nominal features in T, then I should find a higher percentage of overt subjects in these monolingual varieties than in the bilingual one. In order to observe this hypothesis (hypothesis twelve), the

following tables illustrate the participants' preference for overt or null subjects in the different oral tasks.

In table 4.69., I present the cross-tabulation of the two monolingual groups and the bilingual one with regard to overt and null subjects in the oral production of interrogative sentences, i.e., in the role-play task. Although table 4.69. illustrates the percentages of overt and null subjects, I will mainly discuss the percentages of overt subjects, since this is the main focus of my twelfth hypothesis.

Table 4.69.: Cross-tabulation of DS monolingual (from El Cibao and Santo Domingo) and bilingual speakers with regard to overt and null subjects in interrogatives – Role-Play (N = 1170)

Role-play	**El Cibao**	**Santo Domingo**	**Bilingual**	**Total overt/null**
Overt subjects	N = 268 70.2%	N = 287 73.2%	N = 241 60.9%	N = 796 68.0%
Null subjects	N = 114 29.8%	N = 105 26.8%	N = 155 39.1%	N = 374 32.0%
Total subjects per origin	N = 382 100.0%	N = 392 100.0%	N = 396 100.0%	N = 1170 100.0%

Chi-square: *15.004* *p=<.001>*

As observed in table 4.69., the two monolingual groups produced more overt subjects (70.2% and 73.2%) than the bilingual group (60.9%) in the role play task, i.e., the bilingual group produced more null subjects than the two monolingual groups. Recall that the bilingual group of participants is university-educated. In the Santo Domingo group, the participants with university education also showed the highest percentages of null subjects. The higher percentage of overt subjects by the two monolingual groups suggest that, as I hypothesized, the two monolingual groups have a higher tendency to be marked with [- strong] nominal features in Agr. But since they also produced null subjects, it cannot be affirmed that the monolingual speakers have only the [- strong] features in their grammars. Comparing these results with the ones in the B-test (see table 4.27.), one

observes that, in the B-test, the two monolingual groups also have a higher percentage of overt subjects than the bilingual group (El Cibao: 73.2%, Santo Domingo: 69.0%, and bilingual: 62.4%). The *p* value in the B-test and in the role-play task (*p* value is of .000, and *p* value is of .001, respectively) indicate that the data in both tasks is statistically significant. In the tasks testing interrogative sentences, i.e., in the task testing their competence (B-test) and in the one analyzing their performance (role-play), the two monolingual groups show a higher percentage of overt subjects than the bilingual group. But it cannot be confirmed that the two monolingual groups have the [- strong] nominal value in Agr, since they also have null subjects. Therefore, it can be concluded that the monolingual participants may have different restrictions for overt and null subjects from the bilingual participants, but all of them have [+ strong] nominal features in Agr.

In table 4.70., I present the cross-tabulation of the three groups of participants (two monolingual groups and the bilingual one) according to the percentages of overt and null subjects in the personal story task. But, as in the previous table, I will refer mainly to the percentages of overt subjects (cells in gray), since this is the focus of my twelfth hypothesis.

Table 4.70. Cross-tabulation of DS monolingual (from El Cibao and Santo Domingo) and bilingual speakers with regard to overt and null subjects in declaratives – Personal story (N = 2956)

Personal story	**El Cibao**	**Santo Domingo**	**Bilingual**	**Total overt/null**
Overt subjects	N = 401 41.9%	N = 513 51.3%	N = 413 41.3%	N = 1327 44.9%
Null subjects	N = 555 58.1%	N = 487 48.7%	N = 587 58.7%	N = 1629 55.1%
Total subjects per origin	N = 956 100.0%	N = 1000 100.0%	N =1000 100.0%	N = 2956 100.0%

Chi-square: *25.168* *p=<.000>*

The statistically significant data in table 4.70. (*p* value is of .000) show that the El Cibao group and the bilingual one have very similar percentages of overt subjects (41.9% and 41.3%), whereas the Santo Domingo participants have a higher percentage of overt subjects (51.3%). This latter group has a similar percentage of overt and null subjects (51.3% and 48.7%) in the personal story task, with a slight preference for overt ones (51.3%). The data from the Santo Domingo group demonstrate that overt and null subjects do not seem to have different discursive and prescriptive values in the oral production of declarative sentences (in the personal story task). On the other hand, the similar percentage of overt subjects produced by the participants from El Cibao and by the bilingual ones (41.9% and 41.3%, respectively) demonstrates that these two DS groups have a similar representation of overt subjects in the oral production of the personal story task, i.e. in the oral production of declarative sentences.

Table 4.70. seems to confirm my hypothesis but some contradictions emerge: First, although the two monolingual groups have a higher percentage of overt subjects than the bilingual group, only the Santo Domingo group shows a clearly higher percentage of overt subjects. Second, the three groups of participants have a high percentage of overt and null subjects, i.e., it can be suggested that the three groups of DS speakers have set the [+ strong] nominal features in Agr.

A comparison of the data obtained in the personal story task to data from the C-test (see table 4.27.) illustrates that the three groups of participants have higher percentages of overt subjects in the C-test than in the personal story task. But, since the variables analyzed in the C-test (table 4.27.) are not statistically significant, these results only provide a general idea of the percentages of null and overt subjects by the three

groups; but some other variables may have intervened in the selection of subjects in the C-test. The percentages of overt subjects in the C-test are very similar among the three groups. Specifically, the bilingual group has the highest percentage of overt subjects (67.6%), followed by the El Cibao group (67.1%), and the Santo Domingo participants have the lowest percentage of overt subjects (65.8%). These results demonstrate that the three groups have similar nominal values in Agr in the C-test, i.e., they have similar competence in the overt and null selection of subjects in declarative sentences.

After observing the results from the personal story task and from the C-test, it cannot be confirmed that any of the three groups has established the [- strong] nominal features in Agr. On the contrary, the [+ strong] nominal features are present in the three DS groups, since null subjects are found in the three groups of participants, in both types of tasks: the ones measuring their competence, and the ones measuring their performance.

In the frog story task, i.e., in the picture-based story oral telling task, the use of overt and null subjects is also compared throughout the three groups of participants, as shown in table 4.71. The cells in gray indicate the percentages of overt subjects produced by the three groups of participants. These are the data that I discuss below, since they will confirm or disconfirm my hypothesis.

Table 4.71.: Cross-tabulation of DS monolingual (from El Cibao and Santo Domingo) and bilingual speakers with regard to overt and null subjects in declaratives – Frog story (N = 894)

Frog story	**El Cibao**	**Santo Domingo**	**Bilingual**	**Total**
Overt subjects	N = 172 58.3%	N = 172 57.5%	N = 172 57.3%	N = 516 57.6%
Null subjects	N = 123 41.7%	N = 127 42.5%	N = 128 42.7%	N = 378 42.3%
Total of subjects	N = 295 100.0%	N = 299 100.0%	N = 300 100.0%	N = 894 100.0%

Chi-square: *.064* *p=<.968>*

As illustrated in table 4.71. above, the number of overt subjects produced in the frog story task by the three groups of participants is exactly the same (N = 172). In the frog story task, the three groups of participants show a higher percentage of overt subjects (58.3%, 57.5%, and 57.3%) over null ones (41.7%, 42.5%, and 42.7%). But the *p* value under the table illustrates that the data cross-tabulated in table 4.70. are not statistically significant. The high *p* value indicates that other variables may be intervening in the selection of overt and null subjects by the three groups of speakers. The low number of items analyzed in this table may have also intervened in the lack of statistically significance. Due to the lack of statistical significance of this task, I will briefly refer to the percentages in table 4.71., but no explanation of the data will be intended. As I suggested in previous tables, the nature of the oral task itself may be a factor that affects the significance of the data in table 4.71. That is, in the frog story task, the presence of different animal subjects may have influenced the preference for overt and null subjects. The highest percentage of overt subjects is found in the monolingual group from El Cibao (58.3%), closely followed by the other monolingual group (57.5%), and finally, the lowest percentage of overt subjects is produced by the bilingual group (57.3%). Although the two monolingual groups have a higher percentage of overt subjects than the bilingual one, my hypothesis cannot be confirmed. Specifically, the percentage of overt subjects produced by the three groups is not as high as it should be (closer to 100.0%) in order to confirm that the [- strong] nominal value in Agr has been adopted by the two monolingual groups.

4.3.3.1. Overt vs. null subjects (Person and number): Results from the bilingual group of DS students

Following the hypotheses proposed in chapter 1, hypothesis thirteen refers to the selection of subjects according to their person and number. As previously explained, in the oral tasks this hypothesis is not addressed, since each oral task is designed to examine the oral production of certain person and number subjects, and not a wide variety of them.[188] Therefore, analyzing the use of subjects according to their person and number in the oral tasks will provide misleading results. Consequently, hypothesis thirteen is not addressed in the oral tasks.

4.3.4. Subject-verb inversion: Results from the two monolingual groups and the bilingual group of DS students

This section is subdivided into two subsections. In the first of them, I present the results that address hypothesis fourteen; and in the second subsection, the results for hypothesis fifteen are studied. Both subsections refer to the property of the subject-verb inversion, as it is produced in the oral tasks by the three groups of DS participants (El Cibao, Santo Domingo, and bilinguals). In the following subsections, I analyze the subject-verb inversion property according to two different variables: in section 4.3.4.1., the subject-verb inversion property is analyzed according to the pronominal and lexical nature of the subject; and in section 4.3.4.2., this property is analyzed according to the function of the wh-phrase before its extraction (wh-argument or wh-adjunct).

[188] For instance, the role-play task promotes the use of second person; the personal story task anticipates mostly first and third person subjects; and the frog story task promotes the use of third person subjects.

4.3.4.1. Subject-verb inversion (Pronominal vs. lexical): Results from the two monolingual groups and the bilingual group of DS students

In hypothesis fourteen, I proposed that if monolingual DS speakers (in El Cibao and Santo Domingo) show a higher preference for the [+ strong] verbal features in T than bilingual participants, then it would be expected that the monolingual group will show more postverbal subjects than the bilingual group (irrespective of the pronominal or lexical nature of the subjects). The gray cells in table 4.72. show a cross-tabulation of DS monolingual (from El Cibao and Santo Domingo) and bilingual speakers with regard to the types of subjects used in the production of oral interrogatives, i.e., in the role-play task. In table 4.72., the percentages of overt (pronominal and lexical) and null subjects are presented, although I will refer only to the percentages of postverbal pronominal and lexical subjects (cells in gray) in the role-play task.

Table 4.72.: Cross-tabulation of DS monolingual (from El Cibao and Santo Domingo) and bilingual speakers with regard to postverbal pronominal and lexical subjects in interrogatives – Role-Play (N = 1170)

Role-play		**Null**	**Preverbal**	**Postverbal**	**Total**
El Cibao	**Null**	N = 114 100.0%	-	-	N = 114 100.0%
	Pronominal	-	N = 127 76.5%	N = 39 23.5%	N = 166 100.0%
	Lexical DP	-	N = 59 57.8%	N = 43 42.2%	N = 102 100.0%
	Total per origin	N = 114 29.8%	N = 186 48.7%	N = 82 21.5%	N = 382 100.0%
Santo Domingo	**Null**	N = 105 100.0%	-	-	N = 105 100.0%
	Pronominal	-	N = 181 72.1%	N = 70 27.9%	N = 251 100.0%
	Lexical DP	-	N = 24 66.7%	N = 12 33.3%	N = 36 100.0%
	Total per origin	N = 105 26.8%	N = 205 52.3%	N = 82 20.9%	N = 392 100.0%
Bilingual	**Null**	N = 155 100.0%	-	-	N = 155 100.0%
	Pronominal	-	N = 123 57.7%	N = 90 42.3%	N = 213 100.0%
	Lexical DP	-	N = 15 53.6%	N = 13 46.4%	N = 28 100.0%
	Total per origin	N = 155 39.1%	N = 138 34.9%	N = 103 26.0%	N = 396 100.0%

El Cibao: Chi-square: *396.771* *p=<.000>*
Santo Domingo: Chi-square: *392.625* *p=<.000>*
Bilingual: Chi-square: *396.290* *p=<.000>*

As observed in the gray cells in table 4.72., the three groups of participants show a higher percentage of postverbal lexical subjects than of postverbal pronominal ones in the oral production of interrogative sentences. Although the number of items studied in this task is not very high, the three groups of participants show statistical significant data (*p* value is of .000). The total percentage of postverbal subjects produced by each DS group ('total per origin') shows that the highest percentage of postverbal subjects appears in the bilingual group (42.7%), followed by the participants from El Cibao (30.6%), and finally

by the Santo Domingo speakers (28.6%). These percentages indicate that the three groups of participants have [+ strong] verbal values in T. The different percentages of postverbal subjects found in the three groups of participants may be due to the pragmatic and discursive values that each group assigns to postverbal subjects.

In reference to my hypothesis, the pronominal or lexical nature of the subjects should not affect their position.[189] The highest percentage of postverbal pronominal subjects is found among the bilingual participants (42.3%), followed by the Santo Domingo ones (27.9%), and finally by the speakers from El Cibao (23.5%). The percentages of pronominal postverbal subjects produced by the two monolingual groups suggest that their pronominal subjects may be undergoing a cliticization process. Unlike the two monolingual groups, the bilingual participants have a higher percentage of postverbal pronominal subjects (42.3%), which suggests that they are not undergoing any cliticization process. Therefore, my hypothesis is not confirmed with pronominal subjects, since the bilingual participants have higher percentages of postverbal pronominal subjects than the monolingual groups. But, none of the three groups can be said to have [- strong] verbal values in T, since postverbal subjects are found in the three groups.

On the other hand, the bilingual participants (46.4%) produced the highest percentage of postverbal lexical subjects, followed by the participants from El Cibao (42.2%), and the lower percentage is observed among the Santo Domingo participants (33.3%). In the three groups of speakers, the percentage of postverbal lexical subjects is higher than the percentage of postverbal pronominal ones. But the participants from El Cibao produced a similar rate of postverbal lexical subjects (42.2%) to the bilingual

[189] Only pronominal subjects are statistically significant (*p* value is of .000), but not the lexical subjects.

speakers (46.4%). The similarity between these two groups of participants indicates that they may have similar restrictions to produce postverbal lexical subjects.

Two conclusions can be reached: one in reference to the postverbal production of subjects by the DS groups, and the second conclusion refers to the postverbal position of the different subject types (pronominal and lexical). In regard to the first conclusion, the bilingual group of participants has the highest percentages of postverbal pronominal and lexical subjects, which disconfirms my hypothesis, since I expected to find the lowest percentages of postverbal subjects in the bilingual group. In regard to the pronominal or lexical nature of the subjects, a second conclusion can be drawn: pronominal subjects have the lowest percentages of postverbal subjects in the three groups, especially in the two monolingual ones. These latter results suggest that, in the two monolingual groups, pronominal subjects may be undergoing a cliticization process in interrogative sentences (role-play task).

In comparing the results from the role-play task and from the B-test (see table 4.31.), the percentages of postverbal subjects differ. In the B-test (task that examined the participants' competence in interrogatives), the El Cibao group has the highest percentage of postverbal subjects (43.5%), whereas the participants from Santo Domingo and the bilingual ones have similar percentages of postverbal subjects (30.4% and 30.1%, respectively). Furthermore, in the B-test, the three groups show a high percentage of postverbal pronominal subjects (especially the participants from El Cibao, who selected 60.5% postverbal pronominal subjects), which suggest that evidence from the tasks testing competence indicates that pronominal subjects are not going through a cliticization process. Therefore, it can be concluded that pronominal subjects may be

undergoing a cliticization process as evidenced in the tasks testing the participants' performance of interrogative sentences. The lexical nature of the subjects does not offer statistically significant data in any of the two interrogative tasks, i.e., in the role-play and in the B-test. Consequently, this variable should not be considered in this hypothesis, since the position of lexical subjects in interrogative sentences may be affected by other variables, such as the number of syllables of the lexical subject.

The preverbal and postverbal production of subjects in declarative sentences, according to their pronominal or lexical nature is exposed in table 4.73. Table 4.73. presents the percentages of all subjects in the oral production of the personal story task, according to their pronominal and lexical nature. The shadowed cells in the table refer specifically to postverbal pronominal and lexical subjects in the oral report of the personal story.

Table 4.73.: Cross-tabulation of DS monolingual (from El Cibao and Santo Domingo) and bilingual speakers with regard to postverbal pronominal and lexical subjects in declaratives – Personal Story (N = 2956)

Personal story		Null	Preverbal	Postverbal	Total
El Cibao	**Null**	N = 555 100.0%	-	-	N = 555 100.0%
	Pronominal	-	N = 239 94.1%	N = 15 5.9%	N = 254 100.0%
	Lexical DP	-	N = 102 69.4%	N = 45 30.6%	N = 147 100.0%
	Total per origin	N = 555 58.1%	N = 341 35.7%	N = 60 6.2%	N = 956 100.0%
Santo Domingo	**Null**	N = 487 100.0%	-	-	N = 487 100.0%
	Pronominal	-	N = 357 90.2%	N = 39 9.8%	N = 396 100.0%
	Lexical DP	-	N = 90 76.9%	N = 27 23.1%	N = 117 100.0%
	Total per origin	N = 487 48.7%	N = 447 44.7%	N = 66 6.6%	N = 1000 100.0%
Bilingual	**Null**	N = 587 100.0%	-	-	N = 587 100.0%
	Pronominal	-	N = 243 94.9%	N = 13 5.1%	N = 256 100.0%
	Lexical DP	-	N = 136 86.6%	N = 21 13.4%	N = 157 100.0%
	Total per origin	N = 587 58.7%	N = 379 37.9%	N = 34 3.4%	N = 1000 100.0%

El Cibao: Chi-square: *1062.496* *p=<.000>*
Santo Domingo: Chi-square: *1027.482* *p=<.000>*
Bilingual: Chi-square: *1021.475* *p=<.000>*

In the personal story task, the percentages of postverbal subjects (irrespectively of their pronominal or lexical nature) tend to be smaller than in the oral production of interrogative sentences, i.e., in the role-play task (see table 4.72.). This difference may be caused by the types of sentences analyzed in each task, i.e., in the role-play task, interrogative sentences are analyzed; whereas in the personal story task, declarative sentences are under consideration. Specifically, as observed in the total amount of postverbal subjects per origin of the group, the highest percentage of postverbal subjects

is found among the participants from Santo Domingo (6.6%), followed by the other monolingual group, i.e., by the participants from El Cibao (6.2%), and finally by the bilingual group (3.4%). The three groups of participants are statistically significant (*p* value is of .000), as indicated under table 4.73.

According to the pronominal or lexical nature of the subject, the postverbal production of lexical subjects is higher than the production of postverbal pronominal subjects in the three DS groups. The two types of subjects (pronominal and lexical) are within the statistically acceptable limits set in this study (up to a *p* value of .050). Specifically, lexical subjects offer more statistically significant data (*p* value is of .001) than pronominal ones (*p* value is of .043). Since postverbal lexical subjects are more statistically significant, and the percentages are higher, I will first pursue a discussion regarding this type of subjects, and I will refer to the pronominal subjects afterwards.

The highest percentage of postverbal lexical subjects is found among the participants from El Cibao (30.6%), followed by the Santo Domingo speakers (23.1%), and finally, the lowest percentage of postverbal lexical subjects is produced by the bilingual group (13.4%). However, these results do not demonstrate that the bilingual group has adopted the [- strong] verbal values in T (because postverbal subjects are also present). These results suggest that the bilingual group may be moving towards the [- strong] verbal values in T when producing lexical subjects in declarative sentences.

Up to this point, my hypothesis is confirmed, since the two monolingual groups have a higher percentage of postverbal lexical subjects than the bilingual group. The highest percentage is found among the Santo Domingo participants (9.8%), followed by El Cibao speakers (5.9%), and finally the lowest percentage of postverbal pronominal

subjects is produced by the bilingual participants (5.1.%). These results suggest that the three groups seem to be avoiding the production of postverbal pronominal subjects, especially the participants from El Cibao and the bilingual ones, although the three DS groups seem to have the [- strong] verbal value in T. However, some other variables (such as, pragmatic and discursive values) may be affecting the postverbal position of subjects, as indicated in the *p* value (*p* value is of .043).

When comparing the results in the personal story task with the ones in the C-test (table 4.32.),[190] the three groups of DS speakers show higher percentages of postverbal subjects in the C-test than in the personal story task. Moreover, the two monolingual groups have higher percentages of postverbal subjects than the bilingual group. These results suggest that in these two tests (the personal story task and the C-test), the bilingual participants seem to be in the process of losing the [+ strong] verbal features in T, as evidenced in the tasks testing their performance and in their competence in declarative sentences. However, the bilingual participants seem to keep the [+ strong] values in T more in the tasks testing their competence than in those testing their performance. Specifically, in tasks testing their performance, there is evidence for the [- strong] verbal values in T, especially with pronominal subjects.

---

[190] In the C-test (see table 4.32.), the highest percentage of postverbal subjects was selected by the participants from El Cibao (29.4%), followed by the Santo Domingo ones (14.4%), and finally, the lowest percentage of postverbal subjects was selected by the bilingual group (8.9%). These general results suggest that the bilingual group seems to be losing postverbal subjects in their competence, i.e., their [+ strong] verbal values in T seem to be disappearing, whereas this is not the case of the two monolingual groups. In reference to the pronominal or lexical nature of the postverbal subject in the C-test, the two monolingual groups showed a higher percentage of postverbal pronominal subjects than postverbal lexical ones. Specifically, as illustrated in table 4.32., El Cibao selected 44.6% postverbal pronominal subjects, and 39.0% postverbal lexical ones; and the Santo Domingo participants selected 23.6% postverbal pronominal subjects and 12.3% postverbal lexical ones. Unlike the two monolingual groups, the bilingual participants selected a slightly higher percentage of postverbal lexical subjects (15.5%) than of postverbal pronominal ones (12.7%) in the C-test.

Finally, table 4.74. illustrates the oral production of subjects in the frog story task, i.e., it presents the percentages of overt and null subjects in declarative sentences. In the case of overt subjects, they are divided into pronominal and lexical subjects. The cells in gray represent the postverbal production of pronominal and lexical subjects in the frog story task. Although the number of items in table 4.74. is not very high, and generalizations are not made, commentaries are afforded.

Table 4.74.: Cross-tabulation of DS monolingual (from El Cibao and Santo Domingo) and bilingual speakers with regard to postverbal pronominal and lexical subjects in declaratives – Frog Story (N = 894)

Frog story		**Null**	**Preverbal**	**Postverbal**	**Total**
El Cibao	**Null**	N = 123 100.0%	-	-	N = 123 100.0%
	Pronominal	-	N = 17 100.0%	N = 0 .0%	N = 17 100.0%
	Lexical DP	-	N = 116 74.8%	N = 39 25.2%	N = 155 100.0%
	Total	N = 123 41.7%	N = 133 45.1%	N = 39 13.2%	N = 295 100.0%
Santo Domingo	**Null**	N = 127 100.0%	-	-	N = 127 100.0%
	Pronominal	-	N = 27 96.4%	N = 1 3.6%	N = 28 100.0%
	Lexical DP	-	N = 122 84.7%	N = 22 15.3%	N = 144 100.0%
	Total	N = 127 42.5%	N = 149 49.8%	N = 23 7.7%	N = 299 100.0%
Bilingual	**Null**	N = 128 100.0%	-	-	N = 128 100.0%
	Pronominal	-	N = 12 92.3%	N = 1 7.7%	N = 13 100.0%
	Lexical DP	-	N = 145 91.2%	N = 14 8.8%	N = 159 100.0%
	Total	N = 128 42.7%	N = 157 52.3%	N = 15 5.0%	N = 300 100.0%

El Cibao: Chi-square: *304.488* *p=<.000>*
Santo Domingo: Chi-square: *303.821* *p=<.000>*
Bilingual: Chi-square: *300.033* *p=<.000>*

In the frog story task, where the three groups of participants are statistically significant (*p* value is of .000); the two monolingual groups produced the highest percentages of postverbal subjects. The highest percentage of postverbal subjects (pronominal and lexical) is found among the El Cibao participants (13.2%), followed by the Santo Domingo group (7.7%), and finally, the lowest percentage of postverbal subjects was produced by the bilingual participants (5.0%). As in the personal story task, in the frog story task, the three groups of DS participants produced more postverbal lexical subjects than postverbal pronominal ones. In the frog story task, only lexical subjects are statistically significant (*p* value is of .000), but not pronominal subjects. The lack of statistical significance of pronominal subjects means that, in the production of pronominal subjects in the frog story task, other variables may have affected their appearance in preverbal or postverbal position, or as null subjects. Therefore, only lexical subjects will be discussed below, and no in-depth discussion of postverbal pronominal subjects will be given.

Earlier it was found that the highest percentage of postverbal lexical subjects appears among the El Cibao group (25.2%), followed by Santo Domingo (15.3%), and finally, the lowest percentage of postverbal lexical subjects is produced by the bilingual speakers (8.8%). These percentages suggest that the [- strong] verbal values in T seem to be in the process of being adopted by the bilingual participants, although they have not been established yet (they still produce postverbal subjects). In the C-test (see table 4.32.), i.e., in their competence, the percentage of postverbal lexical subjects (15.5%) is slightly higher than in their performance in the frog story task (8.8%). In regard to lexical subjects, the two monolingual groups have higher percentages of postverbal lexical

subjects than the bilingual group. In the case of the bilingual participants, they seem to be losing the [+ strong] verbal value in T (which allows for the postverbal position of subjects), as evidenced especially in the oral production tasks. Consequently, the bilingual group seems to be setting the [- strong] verbal values in T for lexical subjects, which is evidenced more clearly in the performance tasks than in the competence tasks.

On the other hand, a brief overview of postverbal pronominal subjects will be given due to the lack of statistical significance of these types of subjects in the frog story task. In the frog story task, the highest percentage of postverbal pronominal subjects is found in the bilingual group (7.7%), followed by the Santo Domingo participants (3.6%). The participants from El Cibao do not produce any postverbal pronominal subjects (0.0%). However, the lack of statistical significance in pronominal subjects indicates that other variables may be affecting the production of these types of subjects in the frog story task.

Summing up, in the three oral tasks (role-play, personal story, and frog story), i.e., in the oral production of interrogative and declarative sentences, the three DS groups of participants produced higher percentages of postverbal lexical subjects than pronominal ones. The pronominal or lexical nature of the subject influences their position in interrogative and declarative sentences. In declarative sentences, there is a low rate of postverbal pronominal subjects in the three groups. This suggests that they may be undergoing a cliticization process. In regard to the task and the type of sentences, the role-play task (interrogative sentences) shows a higher percentage of postverbal subjects than in the other two oral tasks (personal task and frog story), i.e., there is a higher rate of postverbal subjects in the production of interrogative sentences than in the production of

declarative sentences. Higher percentages of postverbal subjects in interrogative sentences were expected, because inverting the subject and the verb is a typical mechanism of interrogative sentences in GS. Contrary to that, in declarative sentences, the postverbal position of subjects is normally attached to pragmatic and discursive values (an area not analyzed in this study). In the two oral tasks testing declarative sentences (personal story and frog story), the bilingual group results suggest that they are losing the [+ strong] verbal features in T, and adopting the [- strong] ones. But, up to this point, it cannot be said that they have already lost the [+ strong] verbal values in T.

4.3.4.2. Subject-verb inversion (Wh-argument vs. wh-adjunct): Results from the two monolingual groups and the bilingual group of DS students

This subsection addresses hypothesis fifteen, as presented in chapter 1. Specifically, I address the subject-verb inversion property according to the function of the wh-phrase before its extraction (wh-adjunct and wh-argument). In hypothesis fifteen, I proposed that if the monolingual DS (in El Cibao, Santo Domingo) speakers are more sensitive to the constraints of the subject position according to the function of the wh-phrase than the bilingual speakers, I expect to find that the monolingual groups will produce a higher percentage of postverbal subjects with wh-argumental interrogative sentences than the bilingual group. Since this hypothesis refers to the effect that wh-phrases may have over the subject-verb inversion of subjects, only the results from interrogative sentences are presented here, i.e., from the role-play task.

Table 4.75. presents a cross-tabulation of DS monolingual (from El Cibao and Santo Domingo) and bilingual speakers with regard to subjects in wh-argumental and wh-

adjunct interrogative sentences in the role-play task. The cells in gray refer to the postverbal production of subjects with wh-argumental interrogative sentences.

Table 4.75.: Cross-tabulation of DS monolingual (from El Cibao and Santo Domingo) and bilingual speakers with regard to subjects in Wh-argumental interrogatives – Role-play (N = 460)

Role-play		**Wh-adjunct**	**Wh-argument**	**Total**
El Cibao	**Null**	N = 34 31.8%	N = 8 16.7%	N = 42 27.1%
	Preverbal	N = 34 31.8%	N = 23 47.9%	N = 57 36.8%
	Postverbal	N = 39 36.4%	N = 17 35.4%	N = 56 36.1%
	Total	N = 107 100.0%	N = 48 100.0%	N = 155 100.0%
Santo Domingo	**Null**	N = 18 18.4%	N = 12 26.1%	N = 30 20.8%
	Preverbal	N = 46 46.9%	N = 22 47.8%	N = 68 47.2%
	Postverbal	N = 34 34.7%	N = 12 26.1%	N = 46 31.9%
	Total	N = 98 100.0%	N = 46 100.0%	N = 144 100.0%
Bilingual	**Null**	N = 49 41.9%	N = 11 25.0%	N = 60 37.3%
	Preverbal	N = 27 23.1%	N = 12 27.3%	N = 39 24.2%
	Postverbal	N = 41 35.0%	N = 21 47.7%	N = 62 38.5%
	Total	N = 117 100.0%	N = 44 100.0%	N = 161 100.0%

El Cibao: Chi-square: *5.149* *p=<.076>*
Santo Domingo: Chi-square: *1.627* *p=<.443>*
Bilingual: Chi-square: *4.013* *p=<.134>*

Before referring to the shadowed cells in table 4.75., it is worth noting that the number of instances analyzed in the table is low. As a result, no generalizations can be made, but only commentaries are afforded. It is also important to note that none of the three groups of participants offers statistically significant data, as observed under table 4.75., and only wh-adjunct interrogative sentences are statistically significant (*p* value is of .001), but not

wh-argumental ones. None of the data that should confirm or disconfirm my hypothesis is statistically significant. Therefore, a reference to the percentages observed in table 4.75. will be made, but no in-depth explanation will be provided, due to the lack of statistical significance of the data in this table. As illustrated in the gray cells in table 4.75., in the role-play task, the highest percentage of postverbal subjects with wh-argumental sentences is observed among the bilingual speakers (47.7%), followed by the two monolingual groups. Specifically, the El Cibao group produced 35.4% of postverbal subjects with wh-argumental interrogative sentences, and Santo Domingo produced 26.1% of them. Therefore, according to the percentages, my hypothesis is not confirmed, since the two monolingual groups produced a lower percentage of postverbal subjects with wh-argumental sentences than the bilingual group. The lack of statistical significance of the data in table 4.75. indicates that no conclusion can be reached in this hypothesis.

4.3.4.3. Subject-verb inversion (Patterns of language use: language at home, and language preference, and language contact): Results from the bilingual group of DS students

In this section I refer to the subject-verb inversion property among the bilingual participants, according to their patterns of language use; i.e., to the language spoken at home, their language comfort level, and their language contact. Therefore, different hypotheses will be addressed in the two subsections below.

4.3.4.3.1. Subject-verb inversion (Patterns of language use: language at home, and language preference): Results from the bilingual group of DS students

In hypothesis eighteen, I suggested that if the patterns of language use (in this case, language spoken at home and language preference) affect the acceptance and production of null, postverbal, and expletive subjects, then I would expect that those speakers who speak English at home and prefer speaking in English over Spanish would produce and accept a higher frequency of overt expletives, and less postverbal and null subjects than those speakers who prefer Spanish. It should be noted that the data referring to the language spoken at home and the language comfort level were self-reported by the participants. The use of overt expletives will not be addressed in this section, as previously explained due to their low frequency.

I present below the acceptance of null subjects according to the language spoken at home (table 4.76.), and their language preference (table 4.77.). Null subjects appear in the shadowed cells in table 4.76.

Table 4.76.: Cross-tabulation of bilingual speakers with regard to null subjects according to the language spoken at home in the three oral tasks (Role-play, personal story, and frog story) (N = 5020)

		Role-play	**Personal story**	**Frog story**	**Total**
Language spoken at home: Spanish	**Null**	N = 276 28.9%	N = 1308 54.4%	N = 306 42.0%	N = 1890 46.2%
	Overt	N = 678 71.1%	N = 1098 45.6%	N = 423 58.0%	N = 2199 53.8%
	Total	N = 954 100.0%	N = 2406 100.0%	N = 729 100.0%	N = 4089 100.0%
Language spoken at home: Spanish and English	**Null**	N = 98 45.4%	N = 321 58.4%	N = 72 43.6%	N = 491 52.7%
	Overt	N = 118 54.6%	N = 229 41.6%	N = 93 56.4%	N = 440 47.3%
	Total	N = 216 100.0%	N = 550 100.0%	N = 165 100.0%	N = 931 100.0%

Spanish: Chi-square: *43.000* *p=<.000>*
Spanish and English: Chi-square: *17.171* *p=<.000>*

As observed in the last column in table 4.76., in the three oral tasks, the bilingual participants who reported speaking Spanish and English at home have a higher percentage of null subjects (52.7%) than those speakers who reported speaking only in Spanish at home (46.2%).[191] Those speakers who reported speaking both languages at home (Spanish and English) have 45.4% of null subjects in the role-play task, 58.4% in the personal story task, and 43.6% in the frog story task. In contrast, those bilingual participants who reported speaking only in Spanish at home count with 28.9% null subjects in the role-play task, 54.4% null subjects in the personal story task, and 42.0% in the frog story task. Out of the three tasks, only the role-play task shows statistically significant data (*p* value is of .005), but not the personal story task or the frog story. This lack of statistical significance may be due to not having measured or considered the different pragmatic and discursive functions of the subjects. Furthermore, out of these

[191] The variable 'language spoken at home' shows statistically significant data (*p* value is of .000).

three oral tasks, the role-play one shows the highest difference in the percentages of null subjects between the participants who only speak in Spanish at home (28.9%), and those who speak Spanish and English (45.4%). Since the other two oral tasks (personal story and frog story) do not provide statistically significant data, no further analysis of these tasks is provided. However, the percentages of null subjects in the three oral tasks illustrate that my hypothesis is not confirmed with respect to null subjects, because those participants who reported speaking also in English at home (besides Spanish) have a higher percentage of null subjects (45.4%) than those participants who reported speaking only in Spanish at home (28.9%). The higher percentage of null subjects among the speakers who speak in Spanish and English than among the ones that only speak Spanish at home may be linked to the knowledge of the language systems. Therefore, speaking the two languages at home may make them aware that there are different pragmatic and discursive values associated with overt or null subjects. But, basically, the lack of statistical significance in two of the tasks (personal story task or the frog story) indicates that the factor of language use at home may not be influencing the production of subjects in oral speech.

Table 4.77. presents a cross-tabulation of bilingual speakers with regard to null subjects according to the language preference in the three oral tasks. The bilingual group was subdivided into three subgroups: those who prefer using only Spanish, those who prefer only English, and those who use Spanish and English indistinctively, i.e., none of the two languages is preferred over the other. For further information on this subdivisions, see chapter 3. The cells in gray (null subjects) are the main focus of my discussion, since these are the subjects addressed in my hypothesis.

Table 4.77.: Cross-tabulation of bilingual speakers with regard to null subjects according to the language preference in the three oral tasks (Role-play, personal story, and frog story) (N = 5020)

		Role-play	**Personal story**	**Frog story**	**Total per language preference**
Language preference: Spanish	**Null**	N = 240 28.8%	N = 1126 53.5%	N = 271 42.4%	N = 1637 45.7%
	Overt	N = 594 71.2%	N = 980 46.5%	N = 368 57.6%	N = 1942 54.3%
	Total	N = 834 100.0%	N = 2106 100.0%	N = 639 100.0%	N = 3579 100.0%
Language preference: English	**Null**	N = 52 52.0%	N = 148 59.2%	N = 38 50.7%	N = 238 56.0%
	Overt	N = 48 48.0%	N = 102 40.8%	N = 37 49.3%	N = 187 44.0%
	Total	N = 100 100.0%	N = 250 100.0%	N = 75 100.0%	N = 425 100.0%
Language preference: Spanish and English	**Null**	N = 82 34.7%	N = 355 59.2%	N = 69 38.3%	N = 506 49.8%
	Overt	N = 154 65.3%	N = 245 40.8%	N = 111 61.7%	N = 510 50.2%
	Total	N = 236 100.0%	N = 600 100.0%	N = 180 100.0%	N = 1016 100.0%

Spanish: Chi-square: *7.726* *p=<.021>*
English: Chi-square: *2.554* *p=<.279>*
Spanish and English: Chi-square: *51.918* *p=<.000>*

The gray cells in table 4.77. present the percentages of null subjects in the three oral tasks according to the language the participants self-reported feeling more comfortable using. As observed in the shadowed cells in the last column ('total per language preference'), the highest percentage of null subjects is found among the participants who feel more comfortable using English (56.0%), followed by those who are equally comfortable using Spanish and English (49.8%), and the lowest percentage of null subjects is found among the participants who reported feeling more comfortable in Spanish (45.7%). These results do not confirm my hypothesis, since higher percentages of null subjects are found among the participants who reported some comfort level in English, than among those

participants who did not feel comfortable in English. However, the participants who reported feeling more comfortable only in English are not statistically significant, whereas the other two groups are statistically significant. Specifically, the participants who reported feeling more comfortable in Spanish (*p* value is of .021), and those who were equally comfortable in Spanish and in English (*p* value is of .000) provide statistically significant data. Therefore, although the highest percentage of null subjects is found among those participants who self-reported speaking in English at home in the three oral tasks (52.0%, 59.2%, and 50.7%), these data are not statistically significant. With respect to the three oral tasks, only the role-play task offers statistically significant data (*p* value is of .010). This means that the only statistically significant data produced are those produced by the bilingual participants who reported feeling more comfortable in Spanish, or in Spanish and English in the role play. The former group (Spanish preference) has 28.8% null subjects in the role-play task, whereas the group of participants who prefer using Spanish and English has a higher percentage of null subjects (34.7%). As proposed in the table above, the availability of the two linguistic systems (Spanish and English) may promote the awareness of the different pragmatic and discursive factors of overt and null subjects in Spanish. In the case of the language preference, my hypothesis is not confirmed either, i.e., the preference to use only Spanish does not have relationship with a preference for null subjects.

Tables 4.78. and 4.79. present the postverbal production of subjects in the three oral tasks, in regard to the language spoken at home by the bilingual participants and their language preference. As a reminder, the role-play task refers to interrogative sentences, and the personal story and the frog story refer to declarative sentences.

Table 4.78. presents the percentages of null, preverbal, and postverbal subjects in the three oral tasks by the bilingual participants, according to the language they self-reported speaking at home (Spanish, or Spanish and English). The gray cells highlight the use of postverbal subjects in the three oral tasks, according to the language spoken at home. These are the results that I will address below to examine my hypothesis.

Table 4.78.: Cross-tabulation of bilingual speakers with regard to postverbal subjects according to the language preference in the three oral tasks (Role-play, personal story, and frog story) (N = 5020)

		Role-play	**Personal story**	**Frog story**	**Total**
Language spoken at home: Spanish	**Null**	N = 276 28.9%	N = 1308 54.4%	N = 306 42.0%	N = 1890 46.2%
	Preverbal	N = 466 48.8%	N = 959 39.9%	N = 355 48.7%	N = 1780 43.5%
	Postverbal	N = 212 22.2%	N = 139 5.8%	N = 68 9.3%	N = 419 10.3%
	Total	N = 954 100.0%	N = 2406 100.0%	N = 729 100.0%	N = 4089 100.0%
Language spoken at home: Spanish and English	**Null**	N = 98 45.4%	N = 321 58.4%	N = 72 43.6%	N = 491 52.8%
	Preverbal	N = 63 29.2%	N = 208 37.8%	N = 84 50.9%	N = 355 38.1%
	Postverbal	N = 55 25.5%	N = 21 3.8%	N = 9 5.5%	N = 85 9.1%
	Total	N = 216 100.0%	N = 550 100.0%	N = 165 100.0%	N = 931 100.0%

Spanish: Chi-square: *114.614* *p=<.000>*
Spanish and English: Chi-square: *102.298* *p=<.000>*

As observed in the gray cells in table 4.78., the percentages of postverbal subjects are higher in the role-play task (where interrogative sentences were elicited) than in the two oral tasks that evaluated subjects in declarative sentences. These results may be influenced by the type of task. The inversion of the subject and the verb (i.e., postverbal subjects) in interrogative sentences is part of a common mechanism to form questions in

GS, whereas the inversion of the subject and the verb in declarative sentences is normally linked to specific pragmatic and discursive values, such as emphasis or focus.

Only the role-play task shows statistically significant data (*p* value is of .010). In the role-play task, those participants who self-reported speaking both Spanish and English at home produced more postverbal subjects (25.5%) than the bilingual participants who reported speaking only in Spanish at home (22.2%). From a statistical point of view, the two groups of bilingual participants (according to their language spoken at home: Spanish, or Spanish and English) offer statistically significant data (*p* value is of .000), as indicated under table 4.78. This suggests that in the oral production of interrogative sentences, my hypothesis is not confirmed, since those participants who self-reported speaking Spanish and English at home have a higher percentage of postverbal subjects than those participants who only spoke in Spanish at home.

As I proposed previously, the frequent use of two different linguistic systems (Spanish and English) may make these bilingual participants aware of the different values attached to the preverbal or postverbal position of subjects, as well as the different values attached to overt and null subjects.

Unlike in the role-play task, in the other two oral tasks (personal story and frog story), the percentage of postverbal subjects is slightly higher among those bilingual participants who reported speaking only in Spanish at home (5.8%, and 9.3%), than those participants who reported speaking in both Spanish and English at home (3.8% and 5.5%). That is, those participants who reported speaking only Spanish at home produced more postverbal subjects in the oral production of declarative sentences than the participants who self-reported speaking both Spanish and English at home. However my

hypothesis cannot be confirmed in these two oral tasks testing declarative sentences due to the lack statistical significance. Therefore, some other variables may be intervening in the postverbal production of subjects in declarative sentences. As a suggestion, one could propose the English grammatical pattern is having an influence on the position of subjects in the oral production of declarative sentences. However, this proposal requires further research.

In the next table (4.79.), the percentages of null, preverbal, and postverbal subjects in the three oral tasks are presented. The gray cells in table 4.79. present the production of postverbal subjects according to the language preference of the bilingual speakers in the three oral tasks. The gray cells (postverbal subjects) are the only ones discussed below, since the use of postverbal subjects will confirm or disconfirm my hypothesis.

Table 4.79.: Cross-tabulation of bilingual speakers with regard to postverbal subjects according to the language preference in the three oral tasks (Role-play, personal story, and frog story) (N = 5020)

		Role-play	**Personal story**	**Frog story**	**Total**
Language preference: Spanish	**Null**	N = 240 28.8%	N = 1126 53.5%	N = 271 42.4%	N = 1637 45.8%
	Preverbal	N = 414 49.6%	N = 845 40.1%	N = 303 47.4%	N = 1562 43.6%
	Postverbal	N = 180 21.6%	N = 135 6.4%	N = 65 10.2%	N = 380 10.6%
	Total	N = 834 100.0%	N = 2106 100.0%	N = 639 100.0%	N = 3579 100.0%
Language preference: English	**Null**	N = 52 52.0%	N = 148 59.2%	N = 38 50.7%	N = 238 56.0%
	Preverbal	N = 25 25.0%	N = 92 36.8%	N = 35 46.7%	N = 152 35.8%
	Postverbal	N = 23 23.0%	N = 10 4.0%	N = 2 2.7%	N = 35 8.2%
	Total	N = 100 100.0%	N = 250 100.0%	N = 75 100.0%	N = 425 100.0%
Language preference: Spanish and English	**Null**	N = 82 34.7%	N = 355 59.2%	N = 69 38.3%	N = 506 49.8%
	Preverbal	N = 90 38.1%	N = 230 38.3%	N = 101 56.1%	N = 421 41.4%
	Postverbal	N = 64 27.1%	N = 15 2.5%	N = 10 5.6%	N = 89 8.8%
	Total	N = 236 100.0%	N = 600 100.0%	N = 180 100.0%	N = 1016 100.0%

Spanish: Chi-square: *22.193* *p=<.000>*
English: Chi-square: *41.672* *p=<.000>*
Spanish and English: Chi-square: *157.184* *p=<.000>*

As illustrated in table 4.79., the percentages of postverbal subjects (gray cells) in the role-play task are higher than in the other two oral tasks. This was also observed in table 4.78. But in table 4.79, the only statistically significant data are the ones in the role-play task (*p* value is of .043). As previously noted, the nature of the task may be affecting the lack of statistical significance.

In the role-play task, the highest percentage of postverbal subjects is found among the bilingual participants who reported feeling equally comfortable speaking in both

Spanish and English (27.1%), whereas the lowest percentage of postverbal subjects in the role-play tasks were produced by the bilingual participants who reported a preference to speak in Spanish (21.6%). In-between these two groups are the bilingual participants who reported a preference to speak in English, who produced 23.0% postverbal subjects. It is worth noting that the three groups of bilingual speakers show statistically significant data (*p* value is of .000). On the other hand, in the two oral tasks testing declarative sentences (which lack statistical significance), there is one common pattern: the highest percentage of postverbal subjects is found among the bilingual participants who reported preferring to speak in Spanish (6.4% and 10.2%).

The results presented in table 4.79. illustrate that my hypothesis is not confirmed with interrogative sentences, since the lowest percentage of postverbal subjects was produced by the participants who reported feeling more comfortable using only Spanish, whereas the other two groups have higher percentages of postverbal subjects. In declarative sentences, although my hypothesis seems to be confirmed in the two oral tasks (personal story and frog story), the lack of statistical significance in these two tasks rejects the confirmation of the hypothesis. Therefore, some other variables (such as pragmatic and discursive factors) may be intervening in the position of subjects in declarative sentences.

4.3.4.3.2. Subject-verb inversion (Patterns of language use: language contact): Results from the bilingual group of DS students

Hypotheses nineteen and twenty-one are not addressed in the results of oral tasks, since they refer to *that*-trace constructions, and the amount of instances with this type of constructions was not significant to run statistical analyses.

Hypothesis twenty refers to the subject preference according to the bilinguals' language contact with other Spanish varieties. All bilingual participants have contact with English, but not all of them reported having constant contact with GS varieties. This is why in my twentieth hypothesis I proposed that if language contact affects the realization of overt versus null subjects, then, I would expect that those bilingual speakers who have more contact with other Caribbean varieties would produce more overt subjects (preverbal, postverbal, and expletives) than the speakers who have mainly contact with other GS varieties. Table 4.80. presents the total number of overt versus null subjects in the three oral tasks by the bilingual speakers, according to their language contact. The overt use of subjects is subdivided according to their preverbal or postverbal position. In table 4.80., I present the cross-tabulation of bilingual students with regard to overt and null subjects in the three oral tasks, according to their language contact (only CS varieties, or CS and GS varieties). The cells in gray present the use of overt subjects in these three tasks.

Table 4.80.: Cross-tabulation bilingual students with regard to overt and null subjects in the three oral tasks, according to their language contact (N = 5020).

		Role-play	**Personal story**	**Frog story**	**Total per language contact**
Language contact: Mainly Caribbean (infrequent contact with GS)	**Null**	N = 282 29.6%	N = 1306 54.3%	N = 310 42.5%	N = 1898 46.4%
	Overt	N = 672 70.4%	N = 1100 45.7%	N = 419 57.5%	N = 2191 53.6%
	Total	N = 954 100.0%	N = 2406 100.0%	N = 729 100.0%	N = 4089 100.0%
Language contact: GS and Caribbean (frequent contact with GS)	**Null**	N = 92 42.6%	N = 323 58.7%	N = 68 41.2%	N = 483 51.9%
	Overt	N = 124 57.4%	N = 227 41.3%	N = 97 58.8%	N = 448 48.1%
	Total	N = 216 100.0%	N = 550 100.0%	N = 165 100.0%	N = 931 100.0%

CS: Chi-square: *31.285* *p=<.000>*
GS and CS: Chi-square: *25.314* *p=<.000>*

As indicated in the gray cells of the last column in table 4.80., in the three oral tasks, the participants who reported having contact with CS varieties and infrequent contact with GS varieties have a higher percentage of overt subjects (53.6%) than the participants who have contact with CS and GS (48.1%) varieties. The two subgroups of bilingual speakers according to language contact (only CS, or CS and GS) offer statistically significant data (*p* value is of .000). However, none of the three oral tasks shows statistically significant data. Due to the lack of statistical significance, a brief overview of the percentages of overt subjects in the three oral tasks will be presented, but no discussion of these percentages will be provided, since further study of other possible influencing variables is required.

Out of these three oral tasks, the role-play task has the lowest *p* value (*p* value is of .123), but it is still non significant. In this task (role-play), those participants who have infrequent contact with GS produced more overt subjects (70.4%) than those speakers

who reported having frequent contact with GS (57.4%). Due to the lack of statistical significance, it can be suggested that other variables may be influencing the data in table 4.80. For instance, the speakers' formal education (in an academic setting) of Spanish, or the type of language contact (interpretative, or interactive and interpersonal). These are some of the variables that may have an effect in oral production. Oppositely, in the statistically significant B-test (see table 4.47.), the participants with contact with GS have a higher percentage of overt subjects (67.9%) than the participants with no contact with GS (57.1%). But, in the B-test, the bilingual participants who have contact with CS and GS do not provide statistically significant data. Despite the lack of statistical significance of the personal story task, one observes that those participants with infrequent contact with GS varieties produced a higher percentage of overt subjects (45.7%) than those participants who have frequent contact with GS varieties (41.3%). Moreover, the role-play task and the personal story task show a higher percentage of overt subjects among the participants with infrequent contact with GS. But this is not the case in the frog story task. In the frog story task, the bilingual participants with frequent contact with GS show a slightly higher percentage of overt subjects (58.8%), than those bilingual participants who had infrequent contact with GS (57.5%). However, the frog-story task does not offer statistically significant data. These data need to be further analyzed, considering the intervention of other variables in the production of overt subjects. Up to this juncture, no conclusions can be reached on this hypothesis.

Table 4.81. presents the position of the overt subjects in the three oral tasks, as produced by the bilingual speakers according to their language contact with other Spanish varieties (only CS, or CS and GS). The cells in gray represent the postverbal use of

subjects in the three oral tasks. These results will be discussed below, in order to confirm or disconfirm my hypothesis.

Table 4.81.: Cross-tabulation bilingual students with regard to null, preverbal, and postverbal subjects in the three oral tasks, according to their language contact (N = 3840).

		Role-play	**Personal story**	**Frog story**	**Total per language contact**
Language contact: Mainly Caribbean (infrequent contact with GS)	**Null**	N = 282 29.6%	N = 1306 54.3%	N = 310 42.5%	N = 1616 51.5%
	Preverbal	N = 457 47.9%	N = 956 39.7%	N = 347 47.6%	N = 1303 41.6%
	Postverbal	N = 215 22.5%	N = 144 6.0%	N = 72 9.9%	N = 216 6.9%
	Total	N = 954 100.0%	N = 2406 100.0%	N = 729 100.0%	N = 3135 100.0%
Language contact: GS and Caribbean (frequent contact with GS)	**Null**	N = 92 42.6%	N = 323 58.7%	N = 68 41.2%	N = 391 54.7%
	Preverbal	N = 72 33.3%	N = 211 38.4%	N = 92 55.8%	N = 303 42.4%
	Postverbal	N = 52 24.1%	N = 16 2.9%	N = 5 3.0%	N = 21 2.9%
	Total	N = 216 100.0%	N = 550 100.0%	N = 165 100.0%	N = 715 100.0%

CS: Chi-square: *93.991* *p=<.000>*
GS and CS: Chi-square: *119.606* *p=<.000>*

The gray cells in table 4.81. present the postverbal production of subjects by the bilingual speakers, according to their language contact (CS, or CS and GS). As observed in the last column of table 4.81., the participants with infrequent contact with GS (i.e., the group who reported having contact only with CS) produced the highest percentage of postverbal subjects (6.9%), and the participants who have contact with CS and with GS produced a lower percentage of postverbal subjects in the three oral tasks (2.9%). These two subgroups of bilingual participants, according to their language contact (CS, or CS and GS) provide statistically significant data (*p* value is of .000), as indicated under table 4.81. But, as it happened in the previous table, the three oral tasks do not provide

statistically significant data. This lack of statistical significance suggests that other variables (apart from the ones studied in table 4.81.) may be affecting the production of postverbal subjects. Some of these variables may be the pragmatic and discursive values of the subjects. These are topics left for further research.

An overview of the production of postverbal subjects in the three oral tasks shows that, out of the three oral tasks, the role-play task shows the highest percentages of postverbal subjects. In this task (role-play), the participants who self-reported having frequent contact with GS have a slightly higher percentage of postverbal subjects (24.1%) than the bilingual participants who reported having infrequent contact with GS (22.5%). According to the percentages observed in the role-play task, my hypothesis is confirmed, since contact with GS seem to have a mild effect on a higher production of postverbal subjects than the other group (no contact with GS). Unlike in the role-play task, in the other two oral tasks (personal story and frog story), those bilingual participants who self-reported having infrequent contact with GS produced more postverbal subjects in the personal story and frog story task (6.0% and 9.9%, respectively) than those who had frequent contact with GS (2.9% and 3.0%, respectively). That is, frequent contact with GS only seems to mildly influence the higher production of postverbal subjects in the role-play task, but not in the personal story or frog story tasks. But, due to the lack of statistical significance, no conclusions can be reached for my hypothesis. Consequently, further examination is suggested in the production of subjects in the three oral tasks, in regard to the participants' language contact with other Spanish varieties.

4.3.5. Summary of two *pro*-drop properties in the oral tasks (role-play, personal story, and frog story), according to different linguistic and social factors

This section is an overview of the results obtained from the three oral tasks (i.e., from the participants' performance) produced by the three DS groups of participants, in regard to two of the *pro*-drop properties. These two properties are the possibility of having phonologically null subjects, and the possibility of having subject-verb inversion. No expletives or *that*-trace filter constructions are studied in the oral tasks, due to the low amount of instances in which these two properties appear in the oral tasks used. The two properties under study are analyzed considering the influence that some linguistic and social variables may have over them. In the next two subsections these variables are examined. In section 4.3.6.1., the study of the linguistic variables is presented, and in section 4.3.6.2., the effect that some social variables may have over the two *pro*-drop properties is discussed. In the following subsections, only the statistically significant data is considered.

4.3.5.1. Summary of two *pro*-drop properties in the oral tasks (role-play, personal story, and frog story), according to different linguistic factors

In this section, two of the properties normally attached to the *pro*-drop parameter are discussed, according to the results obtained from the three DS groups of participants (monolinguals from El Cibao, monolinguals from Santo Domingo, and bilinguals) in the three oral tasks. In the following table (table 4.82.), there are some cells in blank, and some marked ones. The blank cells indicate that the variable was not statistically significant, or that the variable was not available in a specific task. For instance, in the

personal story and in the role-play tasks, no data about the position of subjects according to the wh-phrase are available, since these two tasks elicited declarative sentences, and the variable (wh-adjunct and wh-argument) measures interrogative ones. The cells marked with a symbol (either asterisks, '+,' or '√') present statistically significant data, and the symbol refers to specific percentages. The meaning of these symbols is found in the legend under table 4.82. In table 4.82., I present an overview of the final results provided by the three DS groups in the three oral tasks.

Table 4.82.: Overview of the final results provided by the three DS groups in the three oral tasks, according to different linguistic variables

		El Cibao			**Santo Domingo**			**Bilingual**		
		Interrog	Declaratives		Interrog	Declaratives		Interrog	Declaratives	
		Role-play	Personal story	Frog story	Role-play	Personal story	Frog story	Role-play	Personal story	Frog story
NULL subjects		+	*		+	+		+	*	
OVERT subjects		***	+		***	*		**	+	
SV	Pronom	***	√		***	√		*	√	
	Lexical		**	***		***	****		****	√
	Wh-adjunct	+								
	Wh-argument									
VS	Pronom	+	+		+	+		+	+	
	Lexical		+	+		+	+		+	+
	Wh-adjunct	+								
	Wh-argument									

Legend table 4.82.:

+	less than 50.0%, but still significant
*	50.0% to 59.9%
**	60.0% to 69.9%
***	70.0% to 79.9%
****	80.0% to 89.9%
√	over 90.0%

In the first property (phonologically null subjects), no linguistic variables are presented. In the GJ tasks, the different person subjects were studied, but, in the oral tasks, this variable was not studied, since each oral task promoted the use of one or two specific person subjects, and not a variety of them. Therefore, there were not enough data to consider a detailed study of the person and number of the subject in the oral reports.

In this first property, the frog story did not provide statistically significant data, i.e., other variables, such as the pragmatic and discursive value of the subjects, may be influencing the types of subjects used. But in the role-play task, the three DS groups show statistically significant data, which indicates that they all preferred the use of overt subjects over null ones in the oral production of interrogative sentences. The highest percentages of overt subjects in the role-play task can be found in the two monolingual groups, with a percentage between 70.0% and 79.9% ('***'), whereas the bilingual group shows a lower percentage, between 60.0% and 69.9% ('**'). This high percentage of overt subjects is not found in the personal story task. These results indicate that, although the two monolingual groups have available to them the [+ strong] nominal features in Agr in interrogative and in declarative sentences; they show a preference for overt subjects in interrogatives; i.e., they may be moving toward the [- strong] nominal values in Agr, proper of English-like languages; however, the [+ strong] ones are still present.

With respect to the second *pro*-drop property (subject-verb inversion) I studied two different linguistic constraints: the type of subject (pronominal or lexical), and the type of wh-phrase (wh-adjunct vs wh-argument). The latter variable has very low statistical significance, as observed in table 4.82. With respect to the position of subjects according to their pronominal or lexical nature, one observes that the use of pronominal

subjects is not significant in the frog story task, but it is significant in the role-play and in the personal story task. In the latter task, i.e., eliciting declarative sentences, the percentages of preverbal pronominal subjects is very high (over 90.0%) in the three DS groups. These data suggest that they show a tendency to have obligatory preverbal pronominal subjects in declarative sentences, which suggests that a cliticization process may be in progress, as suggested by Lipski (1977), and Ordóñez Olarrea (2006) among others. In interrogative sentences, the two monolingual groups still show a high percentage of preverbal pronominal subjects (between 70.0% and 79.9%), which suggests that, in interrogative sentences, the monolingual participants from El Cibao and Santo Domingo may be also undergoing a process of cliticization. But if a cliticization process is taking place in interrogative sentences, it is not as advanced as it seems to be in declarative sentences. Furthermore, it is not clear that the DS bilingual speakers are undergoing a cliticization process in interrogative sentences, since they show a low percentage of preverbal pronominal subjects (between 50.0% and 59.9%). However, they seem to be undergoing a cliticization process in declarative sentences (as previously stated).

Lexical subjects show an interesting pattern in the oral production of declarative sentences, although they are not statistically significant in interrogative sentences (role-play). In the two oral tasks eliciting declarative sentences, the highest percentage of preverbal lexical subjects is produced by the bilingual participants, followed by the Santo Domingo ones, and finally, the El Cibao participants show the lowest percentages of preverbal lexical subjects. These results suggest that the bilingual participants may be adopting the [- strong] nominal values in Agr in declarative sentences. The adoption of

these features will cause the preverbal position of subjects, irrespective of the pronominal or lexical nature of the subject (as in English-like languages). This apparent adoption of the [- strong] nominal values in Agr may be taking place also among the Santo Domingo participants, in the oral production of declarative sentences. Finally, the El Cibao participants do not seem to be undergoing the same change, since the percentage of preverbal lexical subjects is not as high as in the other two groups (bilingual and Santo Domingo).

In sum, in declarative sentences, the bilingual group and the Santo Domingo one seem to be going through a similar change in the nominal values of Agr, i.e., both groups appear to be adopting the [- strong] nominal values in Agr. These [- strong] nominal values affect first pronominal subjects, and second lexical subjects. The adoption of these features is more evident in the frog story task (a more guided story) followed by the personal story task (a less guided story). On the other hand, El Cibao participants do not seem to be undergoing the same change in the nominal features of Agr. Specifically, in El Cibao, pronominal subjects seem to be going through a cliticization process in declarative sentences, but lexical subjects do not seem to be undergoing a change towards the [-strong] nominal values in Agr. It could also be suggested that the three DS groups are undergoing a cliticization process of pronominal subjects as evidenced in the personal story task (declarative sentences), and that lexical subjects are going through a change in the nominal values in Agr (from [+ strong] to [-strong]) only among the bilingual participants, and among the monolingual speakers from Santo Domingo, but not in the group from El Cibao.

4.3.5.2. Summary of two *pro*-drop properties in the oral tasks (role-play, personal story, and frog story), according to different social factors

In this section, an overview of the statistically significant data in two of the *pro*-drop properties is presented, according to the influence that some social factors may have over them. Three groups of DS speakers (monolinguals from El Cibao, monolinguals from Santo Domingo, and bilinguals) offered data in the oral production of three tasks. One of the three oral tasks elicited interrogative sentences (role-play), and the other two tasks elicited declarative sentences. Table 4.83. presents an overview of the final results provided by the three DS groups in the three oral tasks, according to different social variables (age, education level, and patterns of language use).

Table 4.83.: Overview of the final results provided by the three DS groups in the three oral tasks, according to different social variables

		El Cibao (Age)				Santo Domingo (Education level)			Bilingual (Patterns of language use)						
									Lg @ home		Lg comfort/ Preference			Lg contact	
		Age 18-29	Age 30-39	Age 40-50	Age over 50	Elem.	Second.	Univ.	Span.	Span. & Engl.	Span.	Engl.	Span. & Engl.	CS	CS & GS
NULL subjects	Role-play	+	+	+	+	+	+	+	+	+	+		+		
	Personal story					+	+	*							
	Frog story														
OVERT subjects	Role-play	**	**	****	***	**	***	***	***	*	***		**		
	Personal story					*	*	+							
	Frog story														
SV	Role-play	*	+	**	+	+	*	*	+	+	+	+	+		
	Personal story	+	+	+	+	+	+	+							
	Frog story														
VS	Role-play	+	+	+	+	+	+	+	+	+	+	+	+		
	Personal story	+	+	+	+	+	+	+							
	Frog story														

Legend table 4.83.:

+	less than 50.0%, but still significant
*	50.0% to 59.9%
**	60.0% to 69.9%
***	70.0% to 79.9%
****	80.0% to 89.9%

In table 4.83., some of the cells are left blank, and some others are marked with a symbol. The ones marked with a symbol (that represents the percentage, as indicated in the legend below the table) provide statistically significant data, whereas the ones in blank are not statistically significant. The task that shows more instances of statistically significant data is the role-play task. In the following paragraphs, a reference to the main results obtained

in the analysis of different social variables and the two *pro*-drop properties under study is presented.

The age factor was only considered in the analysis of the El Cibao's data. In El Cibao, all age-ranges produced more overt subjects than null ones, as observed in table 4.83. Out of the four age ranges, the two youngest groups (i.e., age 18 – 29, and 30 – 39) produced the lowest percentages of overt subjects, and the two oldest groups offered the highest percentages of overt subjects, especially the group between 40 and 50 years old (they produced between 80.0% and 89.9%). These data indicate that the [+ strong] nominal values in Agr are available to all age ranges, but there is less evidence of this in the data from the two oldest groups of participants, especially for the ones between 40 and 50. This same age group (age 40 – 50) produced the highest percentage of preverbal subjects in the oral production of interrogative sentences (between 60.0% and 69.9%). Specifically, in interrogative sentences, the El Cibao participants between 40 and 50 years old seem to be moving towards an English-like linguistic model. That is, in the oral production of interrogative sentences, they seem to adopt first the [- strong] nominal values in Agr (which leads to the overt production of subjects), and later the [- strong] verbal values in T (which leads to the preverbal position of subjects). This latter property needs further evidence, since the percentage of postverbal subjects is still high.

The educational level of the participants was only considered among the Santo Domingo participants. The level of education of the Santo Domingo participants indicates that the higher their education level is, the higher the percentage of overt subjects in interrogative sentences is. The participants with the lowest educational level (elementary education) have lower percentages of overt subjects than the participants with a higher

educational level, as observed in table 4.83. For this property, it can be suggested that the level of education does not seem to constraint the types of subjects (overt or null) they produce. Similarly, in the second *pro*-drop property analyzed (subject-verb inversion), the two groups with higher education also show higher percentages of preverbal subjects in interrogative sentences than the group with the lowest level of education. Therefore, the educational level of the Santo Domingo participants does not seem to be affected by prescriptive grammars that govern the preference for overt and null subjects, and their position in the oral production of interrogative sentences.

Finally, the bilingual group shows that the language contact variable is not statistically significant. Similarly, no statistically significant data are found in the personal or frog story tasks; i.e., the role-play task is the only statistically significant task. In this task, speaking only Spanish at home (instead of Spanish and English), and preferring speaking in Spanish, or in Spanish and English (but not in English only) enhances the production of overt subjects in interrogative sentences. As a suggestion, these results may be caused by the Spanish variety spoken by the bilingual participants, i.e. DS.

In sum, some changes seem to be affecting the performance of the three DS varieties in regard to their oral production of two *pro*-drop properties (phonologically null subjects and subject-verb inversion) in the three oral tasks of this study. These changes seem to be more easily observed when the two *pro*-drop properties are analyzed in regard to different linguistic variables than when they are observed in different social variables. Another conclusion that can be reached out of the last two tables (tables 4.82. and 4.83.)

is that the frog story task is the least significant task, whereas the role-play and the personal story tasks provide more statistically significant data.

Chapter 5. Conclusions

5.1. Introduction

This chapter is divided in three main sections and different subsections, addressing the conclusions to be drawn from the present study, the implications for language change, and directions for future research. In section 5.2., I present an overview of the grammatical representation of each DS group in regard to the different *pro*-drop properties under study. Along with presenting the grammar of each DS group, I provide an overview of the grammatical analyses that are compatible with their statistically significant data. This section also offers an overview of the hypotheses that were confirmed and their significance for the properties of the *pro*-drop parameter in the three DS groups (El Cibao, Santo Domingo, and the bilingual variety spoken in the U.S.).

In section 5.3., I explore the implications of these findings and these analyses for my initial proposal about language change and its consequences for a general theory of language change. In section 5.4., I include topics that need further research and, finally, in section 5.5., some final remarks conclude the chapter with the main findings of the study.

5.2. Overview of the grammatical representation of the *pro*-drop properties by each DS group

In this section, I present the grammars of each DS group in regard to the *pro*-drop properties analyzed in this study. I also present the grammatical analyses proposed in the

literature that are compatible with my findings. Moreover, a reference to the hypotheses that are confirmed will also be made in this section.

The grammatical patterns presented for each group of speakers (El Cibao, Santo Domingo, and bilinguals) are obtained after comparing the data gathered from the three different DS groups; i.e., the data from the three groups of speakers are cross-tabulated together. However, the three DS groups are cross-tabulated together only when the *pro*-drop properties are analyzed in reference to the effect that some linguistic variables may have on the *pro*-drop properties under study; such as, the effect that the type of subject (pronominal versus lexical) may have over the preverbal or postverbal position of subjects. On the other hand, each DS group was examined individually with respect to the effect of specific social variables. For instance, the effect that the participants' age may have on the representation of the *pro*-drop properties was only analyzed among the El Cibao participants; whereas the educational level of the speakers was only considered among the participants from Santo Domingo.

One more aspect that needs to be considered is that certain hypotheses referred to the two monolingual varieties, and some other hypotheses compared the three DS groups. In the former case, the data from the two monolingual groups were cross-tabulated; whereas in the latter case, the data from the three groups are considered.

In the following subsections, I will refer to these aspects that have been observed in more than one occasion; i.e., I will refer to those aspects that are found either in more than one test, or to those that are statistically significant in both cases: when the two monolingual DS groups are cross-tabulated and when the three DS groups are cross-tabulated.

In addition to providing a description of the *pro*-drop properties exhibited by each group, I will discuss previous proposals presented in the literature to observe if the data in my study are compatible with some of these analyses proposed in the literature. Furthermore, I will refer back to my hypotheses explaining those hypotheses that are confirmed.

Only two out of the four *pro*-drop properties are discussed in the following subsections (phonologically null subjects, and subject-verb inversion). The other two properties (expletives and *that*-trace filter) do not offer statistically significant data to draw any conclusions. This lack of statistical significance may be explained by the low number of tokens that were produced.

5.2.1. Phonologically null subjects

The first *pro*-drop property analyzed was the availability of phonologically null subjects. Prototypical *pro*-drop languages allow phonological null subjects, whereas non-*pro*-drop languages require overt subjects. In this section, I will show the main findings in regard to this first property in the three DS groups studied (El Cibao, Santo Domingo, and bilingual). The following subsections present the grammar of each DS group (El Cibao, Santo Domingo, and bilingual), in regard to the representation of null or overt subjects.

In section 5.2.1.1., I refer to the grammatical patterns found in the group from El Cibao, and I compare their Spanish grammar with some grammatical patterns already presented and analyzed in the literature. In section 5.2.1.2., the same procedure is followed to describe the grammar found in the Santo Domingo group of participants. The

grammar of the bilingual group of speakers is discussed in section 5.2.1.3. Finally, I offer some final remarks that summarize the main findings with respect to this *pro*-drop property.

In this *pro*-drop property, the main part of the statistically significant data comes from the tasks that test interrogative sentences, specially from the B-test (testing the participants' competence) and from the role-play task (testing the speakers' performance).[192]

5.2.1.1. The Spanish grammar of El Cibao (phonologically null subjects)

The group from El Cibao shows a preference for overt subjects in two of the tasks testing interrogative sentences, specifically in the B-test (73.4%) and in the role-play task (70.2%).[193] Since the B-test examines the participants' competence in interrogative sentences, and the role-play task analyzes their performance, one can suggest that the El Cibao group shows a higher percentage of overt subjects than null ones in interrogative sentences. Furthermore, the similar percentages in these two tasks (73.4% and 70.2%) confirm that the evidence of the speakers' competence and their oral production of overt subjects in interrogative sentences are very similar. This high percentage of overt subjects in interrogative sentences partially confirms hypothesis twelve, which states that if the monolingual varieties show a tendency to adopt the [- strong] nominal features in Agr, then one should find a higher percentage of overt subjects in the monolingual varieties than in the bilingual one.

---

[192] As mentioned in chapter 3, the A-test does not examine this first *pro*-drop property, i.e. it does not study the acceptance of phonologically null subjects.

[193] The cross-tabulation of the two monolingual groups does not offer statistically significant data, but when the three groups of DS speakers are cross-tabulated together, they offer statistically significant data in the tests reported above (B-test and role-play).

As will be discussed below (in the section on the Santo Domingo and bilingual groups), when the three DS groups are cross-tabulated together, the two monolingual groups show higher percentages of overt subjects than the bilingual group, in interrogative sentences. However, it cannot be confirmed that the two monolingual groups have completely adopted the [- strong] nominal features in Agr, since null subjects are also found in the three DS groups. This finding suggests that DS is marked with multiple specifications for the Agr nominal features (Toribio, 2000a), or that overt subjects in DS have different discursive and pragmatic values from the ones normally ascribed to GS (Toribio, 2000a; Contreras, 1989; Flores-Ferrán, 2002[194]).

The pragmatic and discursive values of subjects were not analyzed in this study, and they become important features that require further research. However, it is important to observe that the data reported above refer to interrogative sentences. In these types of sentences, the focus of the sentence is the wh-phrase itself, and therefore, the subject is not focalized.[195] Consequently, the high percentage of overt subjects observed in interrogative sentences cannot be ascribed to the focalization of the subject in wh-interrogative sentences, since subjects should not be focalized in wh-interrogative sentences. For that reason, I would suggest that the overt expression of subjects in wh-interrogative sentences cannot be explained in terms of the need to focalize the subjects. This aspect requires further examination, through an in-depth study of the diverse

[194] In Flores-Ferrán (2002), bilingual Puerto Rican speakers used overt pronominal subjects in high frequencies in environments where there was not a switch of subjects.

[195] This study analyzed both yes/no interrogative sentences, and wh-interrogative sentences, but no hypotheses were posited in relation to this difference. However, the difference between these two types of interrogative sentences is a relevant aspect that requires further research. Specifically, in wh-interrogative sentences the focus of the interrogative sentence tends to be the wh-phrase; whereas in yes/no interrogative sentences, the focus can fall on different elements of the sentence. Therefore, analyzing these two types of interrogative sentences (wh-interrogatives and yes/no interrogatives) could provide evidence on the different methods used to mark focalization. Refer to chapter 2 for a more detailed discussion about the different types of interrogative sentences.

pragmatic and discursive roles of overt and null subjects in the different types of interrogative sentences.

In order to observe if the preference for overt or null subjects is changing in El Cibao, I formulated hypothesis ten: if the El Cibao participants were undergoing a process of parametric change, the older participants should show higher percentages of null subjects than the younger ones. Only the role-play task provided statistically significant data in this respect. In the role-play task, i.e. in the task testing the participants' performance in interrogative sentences, the two older groups from El Cibao show higher percentages of overt subjects than the two younger groups. Therefore, the two younger groups have a higher rate of phonologically null subjects than the two older groups, which partly rejects my hypothesis ten. Moreover, the El Cibao participants do not seem to be undergoing a process of parametric change in regard to this *pro*-drop property (phonologically null subjects). Specifically, since the younger speakers from El Cibao show higher rates of phonologically null subjects than their older counterparts, one could propose that phonologically null subjects will be maintained in El Cibao. This higher rate of phonologically null subjects could be caused by different factors not considered in the analysis of the El Cibao's data; such as, the education level of the participants, or their exposure to other Spanish varieties through television, music, computer, or other technological aids. However, the different values and uses that the El Cibao speakers ascribed to phonologically null and overt subjects may not be the same as the ones found in GS. For instance, in GS overt subjects tend to be used to mark contrast and emphasis, the topic of the sentence, or some pragmatic weight (Montes Miró, 1986; Morales, 1986; Silva-Corvalán, 1994; Davidson, 1996). But these discursive strategies

have not been examined in this study. A study of the discursive and pragmatic constraints of overt and null subjects in El Cibao would clarify if the lower rate of overt subjects among the younger participants resembles the GS model or if it differs from it.

5.2.1.2. The Spanish grammar of Santo Domingo (phonologically null subjects)

Like the El Cibao group, the Santo Domingo group offered statistically significant data only in the tasks testing interrogative sentences.[196] For instance, the Santo Domingo speakers show a preference for overt subjects (73.2%) over null ones in the task testing their performance in interrogative sentences, i.e. in the role-play task.[197] This result is similar to the result obtained with the speakers from El Cibao.

The task examining the participants' competence in interrogative sentences (the B-test) offers statistically significant data only when the subject person variable is analyzed. The data revealed that DS speakers do not follow the findings in BP or Italian (De Oliveira, 2000: 50),[198] where first and second person subjects had higher percentages of overt subjects than third person subjects. Specifically, in the B-test, the Santo Domingo group shows a higher percentage of overt subjects in third person (76.6%) than in second person (66.3%).[199] First person subjects have a lower percentage of overt

[196] These statistically significant data in interrogative sentences can be observed in the comparison of the three groups.
[197] Contrary to my hypothesis, the participants with the lowest educational level (elementary education) produced the lowest percentages of overt subjects (62.8%); i.e. they have the highest percentages of null subjects. Therefore, in the Santo Domingo group, having a high education level does not cause producing a low rate of overt subjects.
[198] De Oliveira (2000: 50) exposed that '[i]n both languages [Italian and BP], the proportion of overt subjects is greater in the first and second persons, counterevidence for the hypothesis that full subject pronouns are associated exclusively with a failure in interpretation based on verb morphology alone (cf. also Negrão & Viotti, this volume)'.
[199] The analysis per subject person in the B-test provides significant data for the second and third person.

subjects (56.7%).[200] Therefore, the findings in my study offer different results from the ones found in BP and Italian (De Oliveira, 2000: 50), or Duarte's (2000). As presented below, higher percentages of overt subjects in third and second person have been ascribed to morphological criteria. For instance, DS has been said to have eliminated some of the morphological endings of the verbal paradigm, and therefore ambiguity may appear for some person subjects.

DS does not seem to have a morphologically complex paradigm, but a mixed paradigm, due to the lack of some morphological endings. According to the MUP,[201] proposed by Jaeggli and Safir (1989: 31), "[w]hat is crucial to the licensing of null subject phenomena [...] is only that all forms in the inflectional paradigm [...] are morphologically complex. There can be no mixture of morphologically complex forms with bare stems." In regard to this proposal, since DS appears to have a mixture of morphologically complex forms, overt subjects are expected. Furthermore, the need to have overt subjects to disambiguate when there is verbal ambiguity[202] has been also a matter of intense debate in CS varieties (Kany, 1945; Navarro Tomás, 1966; Quirk, 1972; Bergen, 1976; Lipski, 1977; Hochberg, 1986; Cameron, 1992; Ávila-Jiménez, 1996). Specifically, in CS, some verbal paradigms have lost certain morphological endings (such as final /-s/, or final /-n/[203]). This morphological loss may result in having a unique verbal

---

[200] First person subjects offer less statistically significant data (*p* value is of .057).

[201] As presented in chapter 2, the Morphologically Uniformity Principle (MUP) as proposed by Jaeggli and Safir (1989: 30) establishes that '[a]n inflectional paradigm P in a language L is morphologically uniform iff P has either only underived inflectional form or only derived inflectional form.' They also claimed that 'a paradigm is uniform if all its forms are morphologically complex or if none of them are. If the paradigm is mixed, that is, if some of its forms are morphologically divisible into stem + affix, while other forms, on the other hand, are bare stems, then it is not uniform.'

[202] In CS, one may find a morphological loss of the final /-s/ (proper of second person singular), and of /-n/ (morphological ending for third person plural).

[203] One may find a nasalization of the preceding vowel when the final /-n/ is lost. If nasalization occurs, the distinction is not lost.

form to refer to second person singular subjects, and third person singular or plural subjects (such as '*come*' that could mean 'you sg eat,' 'they eat,' or '(s)he eats'). However, one can also find partial *pro*-drop languages where the distribution of null and overt subjects follow a different pattern from the one found in prototypical null and non-null subject languages (cf. Levy and Vainikka, 1999/2000). It may be suggested that, in my study, the need to disambiguate the subject's referent (due to a lack of morphological endings on the verb) may be the cause that leads to a higher percentage of third and second person subjects over first person subjects. For instance, as introduced in chapter 2, Hochberg (1986) presented the 'functional compensation' proposal, which explained the overt expression of subjects to disambiguate the subject's person of the verb (due to the lack of verbal morphology), and Alba (1982a, b) studied the deletion of /-s/ in Dominican Spanish.[204] But Ranson's (1991),[205] and Morales' (1997)[206] findings did not support Hochberg's hypotheses. In my study I did not examine the realization of the morphological endings. Therefore, a detailed observation of the morphological realization of the verbs would provide appropriate data to validate this proposal.

On the other hand, Otheguy and Zentella (2007) claimed that CS varieties have a high rate of overt second person singular subjects, whereas South American varieties show the highest percentages of overt subjects in third person singular. The differences found in these Spanish varieties with regard to the rates of overt subjects according to the subject person will be considered below when the bilingual participants are examined under a language contact situation.

---

[204] Alba (1982a, b) relates the deletion of final /-s/ in DS to factors such as word length and stress.
[205] Ranson (1991) examined Andalusian Spanish.
[206] Refer to chapter 2 for more information about the different uses of subjects according to the subject's person.

To date and as far as I know, quantitative studies regarding the variable use of overt and null subjects in the Spanish variety spoken in Santo Domingo do not exist. However and with regard to my study, the Santo Domingo variety seems to follow the same pattern as the one observed in the El Cibao group, i.e., they both show a higher percentage of overt subjects than null ones. As I proposed for the El Cibao group, the Santo Domingo group either has more than one possible value assigned to the nominal features in Agr (as proposed by Toribio, 2000a), or the pragmatic and discursive values in this DS variety differ from the GS variety (Toribio, 2000a; Contreras, 1989; Flores-Ferrán, 2002). For instance, the DS and the GS varieties may use different mechanisms to focalize, switch subject referents, or emphasize subjects.

The results from this monolingual group also contribute to the confirmation of hypothesis twelve. In this hypothesis, I proposed that if the two monolingual groups of speakers (El Cibao and Santo Domingo) tend to adopt the [- strong] nominal features in Agr, then they should produce a higher percentage of overt subjects in these two monolingual varieties than in the bilingual one. In the previous section, it was noted that the group from El Cibao exhibited a similar percentage of overt subjects to the Santo Domingo group. In the next section, the three DS groups are compared, and one observes that the bilingual group shows a lower percentage of overt subjects than the two monolingual groups. Consequently, my hypothesis is confirmed. But, these data do not allow us to propose that the [- strong] nominal values have been adopted by the two monolingual groups, since they also show a representation for null subjects, and therefore the [+ strong] nominal values are present. According to Toribio's (2000a) proposal, the DS speakers have available multiple specifications for nominal values in Agr: one that

requires overt subjects ([- strong]), and one that allows null subjects ([+ strong]). Therefore, the results from the two monolingual groups only show that they still have the [+ strong] nominal values in Agr, and the high percentage of overt subjects could demonstrate that the pragmatic and discursive values of overt and null subjects in DS differ from GS, as was previously proposed (Toribio, 2000a; Contreras, 1989; Flores-Ferrán, 2002). Future research on the pragmatic and discursive values of overt and null subjects would help in the understanding of the latter proposal. For instance, an in-depth examination of the mechanisms used to switch or to focalize subject referents might provide evidence of a possible change in the pragmatic and discursive values attached to overt and null subjects in DS.

5.2.1.3. The Spanish grammar of U.S. bilingual DS (phonologically null subjects)

The bilingual group also shows statistically significant data in two of the tasks testing interrogative sentences (B-test and role-play task).[207] In the two tasks examining interrogative sentences (one testing the participants competence and the other testing their performance), the bilingual participants show a higher percentage of overt subjects than null ones. In the B-test, which tests the participants' competence in interrogative sentences, they selected 62.4% overt subjects;[208] and in the role-play task they selected a slightly lower percentage of overt subjects (60.9%). Therefore, the bilingual participants have available to them overt and null subjects in interrogative sentences (in their competence and in their performance), but they show a preference for overt subjects. The

[207] Statistically significant data in the B-test and in the role-play task can be observed in the comparison of the three groups.
[208] Third person subjects show the highest percentages of overt subjects in the B-test (67.6%). First and second person subjects have less than 60.0% overt subjects.

percentage of overt subjects in the two tasks named above (one testing the participants' competence in interrogative sentences, and the other one testing their performance) is very similar. This similarity is a good indicator that the mental representation of the bilingual speakers and their actual performance resemble one another.

If one compares the bilingual group and the two monolingual groups, the bilingual participants show lower percentages of overt subjects in interrogative sentences than the two monolingual groups; i.e. the bilingual speakers have higher percentages of null subjects than the two monolingual groups. This confirms my hypothesis twelve, as previously noted. However, one cannot confirm that any of these three groups have adopted the [- strong] nominal features in Agr. On the contrary, they all show null subjects, which demonstrates that the three DS groups have [+ strong] nominal features in Agr. The lower percentage of overt subjects in the bilingual group suggests that they may be aware of the different pragmatic and discursive values that overt (and null) subjects have in GS varieties, such as the use of overt subjects to focalize or to switch subject referents. Although this is a speculation, this pragmatic and discursive awareness could be explained if one considers that all the bilingual participants are college students who have been exposed to different GS varieties in academic settings. I am presupposing that the registers used in academic settings offer GS input about the uses of overt and null subjects in different pragmatic and discursive situations. This input may influence the students' use of subjects. In my study I did not investigate any data that considers the bilinguals' length of education or academic exposure in Spanish (GS) and the social networks that enhance the quantity of GS input.

In regard to the social variables studied for the bilingual group, three variables create the bilinguals' patterns of language use in my study. Out of these three patterns of language use variables, only two of them (language comfort level and language spoken at home) showed some statistically significant data in the role-play task (but not the language contact variable).

In the role-play task, the participants who reported feeling more comfortable using Spanish[209] produced a higher percentage of overt subjects (71.2%) than those participants who reported feeling comfortable using Spanish and English (65.3%). And the participants who reported using Spanish[210] at home produced a higher percentage of overt subjects (71.1%) than those participants who use Spanish and English at home (54.6%). Considering that the bilingual speakers used the DS variety at home and that this Spanish variety is the one in which they feel more comfortable (since their families are from Dominican Republic), it proves instructive to compare the bilingual group and the two monolingual ones in regard to the production of overt subjects in the role-play task.

Specifically, the participants who reported a preference for speaking only in Spanish produced 71.2% overt subjects in the role-play task, and those who reported using only Spanish at home produced 71.1% overt subjects. These percentages are similar to the percentages of overt subjects produced by the two monolingual groups in this same task, i.e. El Cibao produced 70.2% and Santo Domingo produced 73.2%.

Therefore, one could suggest that the Spanish variety that the bilingual participants use at home and the one they report feeling more comfortable using follows a

---

[209] The families of the bilingual DS speakers in this study are speakers of the DS variety. Therefore, when the DS bilingual participants noted that they felt comfortable using Spanish, I consider that they refer to the DS variety.

[210] The families of the bilingual DS speakers in this study are speakers of the DS variety. Therefore, when the DS bilingual participants noted that they used Spanish at home, I consider that they use the DS variety.

similar pattern to the two monolingual groups. Specifically, the bilingual participants who have the highest exposure to their DS variety (by speaking it at home or preferring to use this variety) use a pattern of overt and null subjects that resembles the monolingual DS speakers on the island. These findings would suggest that, although the participants are bilingual DS speakers living in the U.S., their continuous exposure to DS varieties helps them to conserve their grammar, in regard to the overt and null realization of subjects.

These results did not confirm part of my hypothesis eighteen, where I expected to find more overt subjects among the participants who have certain exposure to English and a lower percentage among those who only had exposure to Spanish (either at home, or as being the language in which they felt more comfortable). There is a great variety of studies that did not find any correlation between the English-contact and the overt expression of subjects (Pérez-Sala, 1973; Morales, 1986; Ávila-Jiménez, 1996; Flores-Ferrán, 2004[211]). On the other hand, other studies found that a longer exposure to English produced higher percentages of overt subjects (see Otheguy et al., 2005[212]). However, another proposal emerged to explain the increase of overt subjects in the U.S.: contact with CS varieties. Specifically, when other GS varieties living in the U.S. get in contact with CS varieties (such as DS), in the end, these GS varieties demonstrate an increase in the frequencies of overt pronominal subjects.

---

[211] Flores-Ferrán (2002) found that English-contact had a slight effect on the overt expression of subjects. However, in Flores-Ferrán (2004), no effect was found between English-contact and the expression of subjects.

[212] Across different Spanish varieties (Mexican, Dominican, Colombian, etc.), Otheguy et al. (2005) observed that Spanish-speakers born in New York had higher rates of overt subjects than speakers who recently arrived to New York.

5.2.1.4. Final remarks on phonologically null subjects in the three DS groups

The three groups of DS speakers show a preference for overt subjects over null ones in interrogative sentences, although the rate of phonologically null subjects is also important. This is true in the tasks testing the participants' competence and the ones testing their performance. Therefore, one may suggest that the three DS groups have available to them phonologically null subjects (in their competence and in their performance); however, they all preferred overt subjects in interrogative sentences. Special attention should be given to the comparison of the two monolingual groups and the bilingual one, with respect to the percentages of overt and null subjects. In interrogative sentences, the bilingual group had higher percentages of null subjects than the two monolingual groups. This lower percentage of overt subjects in the bilingual group suggests that contact with English does not seem to be affecting the first *pro*-drop property, a statement that was also posited in previous studies (Pérez-Sala, 1973; Morales, 1986; Ávila-Jiménez, 1996; Flores-Ferrán, 2004). Moreover, a new proposal has emerged with regard to the effect that English and other Spanish varieties may have on the production of overt subjects among speakers living in the U.S. (see Otheguy et al., 2005[213]). The effect of the Spanish varieties among the bilingual speakers is confirmed when two of the social variables (language comfort level and language spoken at home) are examined. In the case of the bilingual DS speakers examined in this study, the Spanish variety spoken at home, and the preferred language is supposed to be DS. In both cases, the participants who reported feeling more comfortable using only Spanish and those who reported speaking only in Spanish at home have higher percentages of overt

[213] Otheguy et al (2005) found evidence of effects of contact with English in CS, but also effects of contact with other GS varieties.

subjects in interrogative sentences than those participants who reported feeling equally comfortable in Spanish and in English, or those who reported speaking Spanish and English at home. Therefore, high exposure to English does not seem to be promoting a higher percentage of overt subjects (in interrogative sentences) among the bilingual DS participants. This finding seems to support Morales' (1986) proposal, in which the author suggested that in some circumstances the dominant language (in this case English) may not influence a specific process. In the case of DS, the apparent process of change in the nominal values in Agr does not seem to be affected by the dominant language (English).

Considering the suggestion of Thomason and Kaufman (1988) and Clyne (2003), the [- strong] nominal features in Agr could be described as the 'marked' features. In the language contact situation examined in this study,[214] the [- strong] nominal features in Agr seem to be more difficult to acquire[215] and 'less likely [...] to be transferred in language contact' (Thomason and Kaufman, 1988: 51)[216] than the [+ strong] ones. Language acquisition and language contact may share a common path, at least in this particular area.[217] Considering Toribio's (2000a) proposal, the DS bilingual speakers have both features in their grammars, but another possible scenario is that they have [+ strong] features and different pragmatic values from GS. In the first case, they would not experience difficulties acquiring the [- strong] features (they already have them). It is

[214] A Spanish variety that shows features proper of [+ *pro*-drop] languages, and [- *pro*-drop] languages (i.e. DS) in contact with a [- *pro*-drop] language (English), and different varieties of [+ *pro*-drop] languages (GS), and other CS varieties (which seem to be in-between two linguistic systems, as proposed by Toribio 2000a for DS).
[215] 'Less easy to acquire,' in Clyne's (2003: 98) terms.
[216] Thomason and Kaufman (1988: 51) explained that 'universally marked features [...] are less likely than unmarked ones to be transferred in language contact.'
[217] Further evidence can be found in Hyams' data on children's acquisition of English. She claims that, initially, children acquiring English start with a *pro*-drop language.

only in the second case that they would have to acquire them, and this is the scenario in which the [- strong] features could be described as the marked ones.

5.2.2. Inversion of the subject and the verb

The second property of the *pro*-drop parameter under study is the possibility of inverting the subject and the verb. In [+ *pro*-drop] languages, the preverbal and the postverbal position of subjects are not in free variation, i.e. these positions have different values. In the following subsections, I explain how the three DS groups represent this *pro*-drop property. Following the same organization as in the previous section, I will show their representation of this grammatical property and how their representation of the subject-verb inversion property coincides with previous proposals in the literature. I will also mention those hypotheses that are confirmed.

5.2.2.1. The Spanish grammar of El Cibao (subject-verb inversion)

The El Cibao group shows a tendency to opt for preverbal subjects in declarative sentences.[218] The (pronominal or lexical) nature of the subject merits special attention. In the less guided task (i.e. in the personal story task), the El Cibao group presents a high percentage of preverbal pronominal subjects (94.1%).[219] This high percentage of preverbal pronominal subjects in the oral production of declarative sentences suggests that pronominal subjects might be undergoing a cliticization process among the El Cibao group, as was previously suggested by various scholars (Lipski, 1977; Heap, 1990;

---

[218] The preference for the preverbal position of subjects can be observed when the three DS groups are cross-tabulated together in the three tasks testing the position of subjects in declarative sentences (i.e. C-test, personal story, and frog story), and in only two of the tasks (C-test, and frog story) in the cross-tabulation of the two monolingual groups.

[219] These results are only observed when the three groups of DS speakers are cross-tabulated together.

Ordóñez and Olarrea, 2006). The cliticization hypothesis was refuted by Suñer and Lizardi (1992) who state that the subjects could be separated from the verb by a negation, and that some of these subjects could be stressed. Therefore, in order to confirm or reject the cliticization proposal, an in-depth analysis of these aspects is needed. Specifically, and following Suñer and Lizardi (1992), some analyses that would clarify the (clitic) nature of the subject include analyzing if any element was possible between the subject and the verb (such as a negation, or any type of adverb), or if the (clitic) subject could be stressed.

In the other two tasks examining declarative sentences (C-test and frog-story),[220] preverbal subjects are also the preferred position for subjects. Specifically, the percentage of preverbal lexical subjects in the C-test is 61.0%, and in the frog-story is 74.8%.[221] The higher percentage of preverbal lexical subjects in the frog-story task than in the C-test might be explained by the nature of the task. In the frog-story task, different characters were subjects of different actions along the story, which required a constant switch in subject referents.[222] Furthermore, most of the characters appearing in the frog-story task were [- human].[223]

In regard to my fifth and sixth hypotheses, I cannot suggest that the monolingual speakers from El Cibao opted for the [- strong] verbal features in T in all declarative sentences, and irrespective of the subject type. Although there is a pattern of preference of preverbal subjects in declarative sentences, postverbal subjects are also possible,

---

[220] These two tasks are statistically significant when the two groups of monolingual participants are cross-tabulated together, and also when the three of them are cross-tabulated together.
[221] The frog story task showed only statistically significant data with lexical subjects.
[222] Switching referents is one of the discursive aspects that allow for overt subjects in Spanish. See also Givón (1983).
[223] Normally, in GS [- human] subjects are addressed either by null subjects or by lexical ones, according to the pragmatic or discursive function required, but not with pronominal subjects.

especially with lexical subjects. Therefore, in declarative sentences, the El Cibao speakers show traces of [+ strong] verbal features in T. However, in the oral performance of the less-guided task, pronominal subjects show evidence of a possible cliticization process. The difference in the results among the tasks may be biased by the type of task itself. The C-test provides evidence of the participants' competence, and the frog-story task is a guided oral performance that requires a constant switch of [- human] subject referents.

In interrogative sentences only the B-test shows statistically significant data when comparing the two monolingual groups or the three DS groups. In the B-test, the El Cibao participants have a higher percentage of postverbal pronominal subjects (60.5%) than of preverbal ones (39.5%). In interrogative sentences, the unmarked word order in GS requires the postverbal position of subjects (Zubizarreta, 1999a; Ordóñez and Treviño, 1999). Therefore, I expected to have a lower percentage of preverbal subjects in interrogative sentences than in declarative ones. The results obtained in the B-test (higher percentage of postverbal pronominal subjects than preverbal ones) may be biased by the influence of prescriptivist grammars. For instance, the higher percentage of postverbal subjects in the B-test may be due to an effect of the study, since the participants were consciously filling out a written GJ task.[224] Therefore, the results of B-test demonstrate that the [+ strong] verbal features in T are available to El Cibao speakers in interrogative sentences, rejecting my hypothesis five. It must be acknowledged that in *pro*-drop languages, although postverbal subjects are allowed, the preverbal position of subjects is

[224] In the cross-tabulation of the three DS groups, there are statistically significant data in the role-play task. In the role-play task (where the participants' performance was being analyzed), the El Cibao participants produced a higher percentage of preverbal pronominal subjects than of postverbal ones.

the preferred option (Bentivoglio, 1987, 1988;[225] Morales, 1980[226]), especially in some CS varieties, such as DS (Henríquez Ureña, 1940; Jiménez Sabater, 1975; Núñez Cedeño, 1983; Lipski, 1977, 1994, 1996).[227] In most Spanish varieties, postverbal subjects have been associated with pragmatic or discursive factors, such as contrast, topic, or focus (Silva-Corvalán, 1982; Zubizarreta, 1998), and old versus new information (Morales, 1980, 1999).[228]

The function of the wh-phrase (wh-adjunct or wh-argument) in an interrogative sentence has been considered to be a possible variable that might affect the position of the subjects (Torrego, 1984; Goodall, 1991; Suñer, 1994). My hypothesis seven addressed this variable, proposing that if the speakers were sensitive to the constraints of the wh-phrase function, I should find a higher percentage of postverbal subjects with wh-argumental sentences than with wh-adjunct ones. These are the results found in the El Cibao group, which confirms my hypothesis. Specifically, in wh-argumental interrogative sentences,[229] the El Cibao participants selected a higher percentage of postverbal subjects (72.1%) than of preverbal subjects (27.9%). This preference for postverbal subjects with wh-argumental sentences is in accordance with Goodall's (2004) proposal in relation to the processing load, as well as Suñer's (1994) and Olarrea's (1996) proposal about AALC.[230] In both proposals, wh-argumental interrogative sentences favor postverbal

---

[225] Bentivoglio (1987, 1988) studied the Spanish variety spoken in Caracas.
[226] Morales (1980) referred to the semantic type of the verb to explain the preverbal position of subjects.
[227] Refer to chapter 2 for further references on the different proposals that account for the source of preverbal subjects in CS.
[228] When the subject presents new information, it tends to appear in postverbal position; whereas when the subject has been previously presented in the discourse (i.e. old information); it tends to appear in preverbal position (Morales, 1980, 1999).
[229] The El Cibao group offered statistically significant data in some interrogative sentences in the B-test, specifically in interrogative sentences with wh-argumental sentences.
[230] As mentioned in chapter 2, the Argumental Agreement Licensing Condition (AALC) refers to the constraints on having two argumental elements together.

subjects. Although, according to Goodall's (2004) proposal for CS, in this Spanish variety preverbal subjects 'do not disrupt processing of the filler-gap dependency' (Goodall, 2004: 112). But, the El Cibao participants analyzed in this study seem to follow a tendency that is similar to that of GS.

The age of the El Cibao participants does not show a clear effect on the position of subjects. Nonetheless, the youngest group of participants (age 18 – 29) shows a constant preference for preverbal subjects (over postverbal ones) in the tasks testing interrogative[231] and declarative sentences.[232]

5.2.2.2. The Spanish grammar of Santo Domingo (subject-verb inversion)

The Santo Domingo group presents a constant preference for preverbal subjects in all tasks. In declarative sentences, the Santo Domingo group shows a preference for preverbal subjects, specifically preverbal lexical ones.[233] In the C-test and in the frog story, the Santo Domingo group shows a similar percentage of preverbal lexical subjects.[234] This similar percentage suggests that the Santo Domingo group seems to have stability in their competence (C-test) and in their performance (frog-story), in regard to the percentages of preverbal lexical subjects in declarative sentences. Following Suñer's (1982b) proposal, these preverbal subjects in declarative sentences are thematic, i.e. their

[231] The A-test is the only one with statistically significant data for the age group 18-29. In the A-test, they selected 74.1% preverbal subjects. The B-test and role-play does not show statistically significant data for this age group (age 18-29). The El Cibao participants between 18 – 29 years old selected 45.5% preverbal subjects in the B-test and 53.8% in the role-play task.
[232] Only the C-test offers statistically significant data. In the C-test, the El Cibao participants selected 60.6% preverbal subjects, and personal story task they produced 42.0% of the subjects in preverbal position.
[233] Only two of the tasks that examine declarative sentences (C-test and frog story) offer statistically significant data in both cases (when the cross-tabulation considered the two monolingual groups and also when the three groups of DS were cross-tabulated together).
[234] In the C-test, the Santo Domingo group selected 87.7% preverbal lexical subjects (higher than the percentage of preverbal pronominal subjects –76.4 %-), and in the frog-story task they produced 84.7% preverbal lexical subjects.

identification is not essential in a communication exchange. Similarly, Morales (1980, 1999) addresses the difference between preverbal and postverbal subjects in relation to the information they provide; i.e., if subjects are old information (i.e. already mentioned in the discourse), they tend to appear preverbally; whereas postverbal subjects are used to refer to information already known, i.e. old information. The appearance of postverbal subjects in the Santo Domingo data suggests that they have [+ strong] verbal features in T, a finding that contradicts my fifth hypothesis.

In interrogative sentences, the Santo Domingo group also preferred preverbal subjects. In the A-test,[235] the Santo Domingo group selected a higher percentage of preverbal lexical subjects (73.3%) than of preverbal pronominal ones (55.6%). These results challenge the idea proposed by some scholars (Bergen, 1976; Lipski, 1977; Núñez Cedeño, 1983; Contreras, 1989; Heap, 1990; Ordóñez and Olarrea, 2006), who suggested that having preverbal DPs subjects was not possible; whereas these findings confirm the proposals of some others scholars (Lantolf, 1980; Toribio, 1993), who proposed that in CS there are DPs in preverbal position. These data reveal that the Santo Domingo participants have available to them the [+ strong] verbal values in T, since postverbal subjects are also possible in their grammatical representation.

The educational level of the Santo Domingo participants does not seem to affect the position of subjects in any of the tests analyzed in this study, since no statistically significant data have been found.

[235] In the cross-tabulation of the two monolingual groups, and in the cross-tabulation of the three DS groups, the A-test is the only statistically significant test examining interrogative sentences.

5.2.2.3. The Spanish grammar of U.S. bilingual DS (subject-verb inversion)

The bilingual group has high percentages of preverbal subjects in the three tests examining declarative sentences.[236] The bilingual participants demonstrate a lower percentage of preverbal subjects in the test that presents evidence of the participants' competence (C-test), whereas they have higher percentages of preverbal subjects in the other two tasks examining the participants' performance (personal story and frog story).

In regard to the type of subjects (pronominal or lexical), the bilingual group shows a high percentage of preverbal pronominal subjects in the C-test and in the personal story task[237] (87.3% and 94.9%, respectively). The high percentage of preverbal pronominal subjects in these two tasks testing declarative sentences (C-test and personal story) could suggest that the bilingual group is moving toward a cliticization process. Some scholars already suggested a possible cliticization process in some CS varieties (Lipski, 1977; Heap, 1990; Ordóñez and Olarrea, 2006). However, further research is needed to support whether the cliticization process is actually taking place. A cliticization process could be confirmed or rejected if one finds that the subjects can be separated from the verb by any element (such as a negation, or an adverb),[238] or if subjects could be stressed. If subjects can be separated from the verb by an element or if they can be stressed, then these subjects cannot be said to be clitics of the verb.

A relevant finding of this study shows that the frequency of lexical subjects in preverbal position is also high in the three tasks testing declarative sentences. In their performance, the bilingual participants have higher percentages of preverbal lexical

---

[236] The bilingual group only offers statistically significant data in the tests examining declarative sentences (C-test, personal story, and frog story).
[237] Remember that the personal story task is the less-guided oral task designed to elicit declarative sentences.
[238] Suñer and Lizardi (1992) already proposed this approach.

subjects than in their competence. Specifically, in the two oral tasks (performance) they produced a higher percentage of preverbal lexical subjects (in the personal story: 86.6%; and in the frog story task: 91.2%), than in the tasks eliciting data that demonstrate their competence (as observed in the C-test: 84.5%). The high percentage of preverbal lexical subjects cannot be explained through a cliticization process, whereas a high percentage of preverbal pronominal subjects could be explained through a possible cliticization process. However, the high preference for preverbal lexical subjects can be explained through Toribio's (2000a) proposal, in which she suggested that the DS speakers have a double set of values. Therefore, the DS bilingual speakers examined in this study show a preference for the [- strong] verbal values in T when they are using lexical subjects, although they still accept [+ strong] verbal features in T. The selection of the [- strong] feature is more evident in the participants' performance than in their competence.

As previously presented, two aspects should be considered when describing the characteristics of the *pro*-drop properties in the grammar of the bilingual DS speakers in declarative sentences:[239] 1) the difference between the subject type (pronominal or lexical), and 2) the difference between their competence and their performance. With respect to the type of subject, the bilingual DS participants seem to be going through two parallel processes in declarative sentences. Specifically, pronominal subjects seem to be undergoing a cliticization process, whereas lexical subjects seem to be adopting the [- strong] verbal values in T. But, these two processes seem to be more evident in those tasks that test the participants' performance, than in the test that examines their competence. Recall that the bilingual DS speakers are university students, who may be influenced by prescriptive grammar. Consequently, in the test that examines their

[239] There are no statistically significant data for interrogative sentences.

competence (C-test), these prescriptive grammar rules could be influencing the participants' answers. On the other hand, in the two tasks examining their performance, the bilingual speakers produced a higher percentage of preverbal subjects. In the oral production of speech, the influence of the prescriptive rules is less than in the C-test.

The different variables analyzing the bilingual's patterns of language use (language comfort level, language at home, and language contact) do not seem to have a direct influence of the position of subjects.

5.2.2.4. Final remarks on subject-verb inversion in the three DS groups

A common feature found among the three DS groups is that in declarative sentences,[240] the three groups of DS speakers show a higher percentage of preverbal subjects than postverbal ones.[241] But some groups show more similarity in the percentages of preverbal subjects across tasks (i.e. those tasks that examine the speakers' competence and those that test their performance) than some others. Specifically, the highest similarity in the percentages of preverbal subjects across tasks is found in the Santo Domingo group, whereas the El Cibao group shows more diversity in the percentages of preverbal subjects across tasks. These findings indicate that the Santo Domingo group seems to have a more stable representation of grammar, whereas the El Cibao group seems to be the most unstable one; or they may have different grammars.

The three groups of DS speakers have postverbal subjects in declarative and interrogative sentences. Therefore, it cannot be stated that they have adopted the [-

---

[240] The three groups of DS speakers show more statistically significant data in declarative sentences than in interrogative ones.

[241] One would expect this result (i.e., a higher percentage of preverbal subjects in declarative sentences), since in GS postverbal subjects in declarative sentences tend to appear in lower rates than preverbal ones, and they are pragmatically or discursively marked.

strong] verbal features in T, as in English-like languages. However, in the three groups, there is a tendency to have high percentages of preverbal pronominal subjects (higher than preverbal lexical ones), which suggest that pronominal subjects may be in the process of becoming clitics. The high percentage of preverbal pronominal subjects is more evident in those tasks that examine the participants' performance than in those tasks that examine their competence.

5.3. Implications of findings in this study for language change

In chapter one I posited that language change can be caused by different factors, such as linguistic or extralinguistic ones. Among the internal factors is the diachronic development of languages (Faarlund, 1999; Silva-Villar, 2004), and among the external ones is the language contact variable (Davis, 1971; Kany, 1951; Quirk, 1972; Álvarez Nazario, 1972, 1990).

Some scholars consider that language contact does not always cause language change (Morales, 1986), and some other scholars believe that language contact accelerates the language change process (Schmidt, 1985; Mufwene and Gilman, 1987; Maandi, 1989; Silva Corvalán, 1994). For instance, Clyne (2003: 93) indicated that 'internal changes already in progress in the heartland of the language may be accelerated by external (contact) factors.' As proposed in the first chapter of this study, since the DS variety has been considered to be undergoing an internal process of change (Toribio, 2000a), this linguistic variety (DS) is a perfect language model to examine the effect that language contact may have over an undergoing internal linguistic change. To the best of my knowledge, this study is the first to examine the effect of external factors on the

grammatical representation of some *pro*-drop properties in the DS variety. Furthermore, this study examines the difference between the participants' competence and their performance in declarative and in interrogative sentences.

The following paragraphs present the final remarks on how the four *pro*-drop properties are affected by language contact and language change.

With regard to the first *pro*-drop property (phonologically null subjects), the bilingual group accepts more null subjects than the two monolingual groups.[242] Moreover, two of the external variables examined in the bilingual group indicate that those participants who continue using only Spanish (DS) at home, and those who felt more comfortable using only Spanish (DS) produced the highest percentages of overt subjects. These findings suggest that the bilingual selection and use of overt subjects remains similar to their monolingual counterparts if DS is used in their everyday exchanges (either at home, or by preferring using Spanish over any other language). Perhaps these bilingual speakers (the ones who reported speaking in Spanish at home, and the ones who reported feeling more comfortable in Spanish) are trying to show their identity as Dominican, and therefore, they are trying to unconsciously conserve the linguistic patterns observed in the island. A study of the bilingual DS speakers' attitudes and views toward GS, DS, and English may elucidate their linguistic patterns, as was found in Toribio's (2000b) study about Dominican speakers and their linguistic identity in the island and in the U.S.

The other three *pro*-drop properties do not show statistically significant data to observe the effect that some of these external factors may have over the bilingual

[242] It should be noted that only interrogative sentences offered statistically significant data in this first property.

grammatical representation. However, it is worth mentioning that the bilingual speakers tend to show a higher percentage of preverbal pronominal and lexical subjects than the two monolingual groups in declarative sentences.[243] Therefore, since none of the three external variables that examined the bilinguals' patterns of language use (language at home, language comfort level, and language contact) offered statistically significant data, further research is needed to examine if the preverbal position of subjects in declarative sentences is due to an influence from English or to some other variable.

After observing the extensive data in this study, I conclude that, in a language contact situation, some of the properties normally ascribed to the *pro*-drop parameter seem to be affected by language contact, whereas some other properties do not seem to be influenced by the contact with other languages. For instance, when a linguistic variety, such as DS, is placed in a bilingual situation, I would have expected that English would influence this DS variety towards a non-*pro*-drop language model. But this seems to be only the case for one of the properties. Specifically, contrary to my expectations, the bilingual DS speakers have higher percentages of null subjects (in interrogative sentences) than the two monolingual varieties; but according to what I expected, the bilingual participants tend to have higher percentages of preverbal subjects than the two monolingual groups (in declarative sentences). Therefore, in the DS variety, the property of having phonologically null subjects does not seem to be affected by a language contact situation with English (i.e., the [- strong] nominal features in Agr do not seem to be

[243] When the three DS groups are cross-tabulated together, the bilingual group shows statistically significant data in pronominal and lexical subjects in the C-test and in the personal story task, but in the frog-story, only lexical subjects are statistically significant.

adopted by bilingual DS),[244] whereas the subject-verb inversion property seems to be affected by the contact with English (i.e., the [- strong] verbal features in T seem to be adopted in bilingual DS).[245] It could be suggested that they have different patterns for interrogative and declarative sentences. The other two *pro*-drop properties require further analysis, since the data obtained did not provide enough statistically significant data to draw any conclusions.

The different results found in the literature in regard to the influence of English contact on the *pro*-drop properties[246] could be explained if one considers that these properties might be affected differently by language contact, i.e. in a specific sequential order; or possibly, these properties that have normally been ascribed to one single parameter (*pro*-drop) are not part of a unique cluster of properties, but individual properties that happen to appear in null subject languages. Two features of this study helped me to posit the conclusions named above: first, this study had the advantage of examining a language that, in its monolingual variety, already seemed to be undergoing an internal process of change, i.e. it seemed to be in-between two linguistic systems (Toribio, 2000a); and second, this linguistic variety was placed in a language contact situation where input from different linguistic systems was possible. To the best of my knowledge, no other study has examined a linguistic variety with the characteristics of DS in a monolingual and in a bilingual setting.

---

[244] It is only evident that English contact does not affect the null subject property in interrogative sentences. No statistically significant data for declarative sentences were obtained.
[245] It is only evident that English contact affects the subject-verb inversion property in declarative sentences. Not enough statistically significant data for interrogative sentences were obtained.
[246] See Pérez-Sala (1973), Morales (1986), Ávila-Jiménez (1996), Flores-Ferrán (2002, 2004), and Otheguy et al. (2005) for different proposals.

5.4. Future research

This study addresses four different properties normally attached to the *pro*-drop property, and their realization according to different aspects: their realization in tasks eliciting the participants' competence, and in tasks that measured the participants' performance. Moreover, I examined the effect that some linguistic and social variables may have over these four properties. After analyzing the data of this study, many different questions are still to be answered. In this section I will present some proposals for future studies.

There are three main proposals and several smaller proposals that address more specific aspects of the study. The first of these two proposals for future research refer to the statistical methodology used to analyze the data.

Future studies should develop a statistical analysis which will examine each DS group individually and not in comparison with the other DS groups. In that way, one would examine the grammar for each individual group of speakers in isolation, instead of the grammatical representation of these groups in relation to the rest of the groups. However, a study of each individual group would present a study of syntactic dialectology (or comparative syntax), and not a study in which language contact would be analyzed.

The second proposal refers to the study of some GS monolingual and bilingual varieties. Administering the tasks used in this study to monolingual and bilingual speakers of certain GS varieties (such as speakers of Mexican Spanish, or any other variety of Spanish that is not CS) would provide a perfect point of departure to compare my study with other varieties which have not been claimed to be undergoing any internal

change. This study would clarify if language contact would affect the *pro*-drop properties in the same way as DS is being affected. Moreover, one would be able to compare the pragmatic and discursive values attached to each type of sentential subject (phonologically null, preverbal, or postverbal) in DS and in GS. For instance, a comparison of the mechanisms used to focalize or switch subject referents, or to topicalize subjects in these two Spanish varieties (GS and DS) would provide evidence of possible differences between these two Spanish varieties.

The present study would be very well-complemented with the study of the different pragmatic and discursive values of subjects, an aspect that has been proposed in different occasions along the previous chapters. An understanding of the pragmatic and discursive values of subjects could be better obtained if DS and GS varieties are studied and compared under similar circumstances. That is, studying the realization of subjects under a diversity of pragmatic and discursive circumstances (such as, topicalization, emphasis, switch of subject referents, or focalization) would clarify if the realization of subjects in DS is the same as the one found in other varieties of Spanish. Furthermore, distinguishing the different types of interrogative sentences (yes/no and wh-interrogatives) would clarify the pragmatic and discursive values that subjects have in each type of interrogative sentences.

In order to address more detailed aspects of the study, the following suggestions should also be taken into consideration.

- Types of verbs. Dividing the verbs according to the kinds of elements they allow (such as, unaccusative, unergative, and transitive verbs) and

according to the semantics of the verb (mental, movement, etc.) could provide significant data.[247]

- Elements between the subject and the verb. Another proposal is examining if there is any phrase between the subject and the verb, such as adverbs, pronouns, negations, etc. This would be of special value when examining preverbal pronominal subjects in declarative sentences, since it would clarify if a cliticization process is in process.
- Morphological realization of the verb. Studying the morphological realization of the verb could clarify if the overt expression of second and third person subjects is linked to the lack of morphological ending.
- In the case of the bilingual participants:
    - Academic courses on GS. Attending academic courses on GS might have influenced their linguistic representation of Spanish.
    - Attitudes towards GS, DS, and English. The attitudes and views toward the DS language may clarify the patterns found among the bilingual participants. Perhaps, they feel that they need to mark their DS identity, and they may do that through their preservation of certain linguistic aspects.

5.5. Final remarks

This study is unique in the literature because it analyzes different aspects not observed previously with regard to four properties normally attached to the *pro*-drop

[247] In a pilot study I did with DS speakers, the semantics of the verb provided significant data.

parameter (phonologically null subjects, subject-verb inversion, expletives, and *that*-trace constructions). Considering that DS has been suggested to be a Spanish variety undergoing a linguistic change in its monolingual variety (Toribio, 2000a); in this study, I compared two DS monolingual varieties from the Dominican Republic (El Cibao and Santo Domingo), and a DS bilingual variety living in the U.S. This latter variety is under a language contact situation where the DS speakers receive input from English and from different Spanish varieties. Along with this comparison, I examined the participants' competence and performance in interrogative and declarative sentences, through GJ tasks and oral reports. After having compared the three groups of DS speakers (El Cibao, Santo Domingo, and bilingual), only two of the *pro*-drop properties show statistically significant data: phonologically null subjects and subject-verb inversion.

The first *pro*-drop property shows statistically significant data only in interrogative sentences. In the tasks testing the participants' competence and their performance in interrogative sentences, both overt and null subjects are observed in the three groups, although it should be noted that the two monolingual groups show higher percentages of overt subjects than the bilingual group. These data demonstrate that, first, the [+ strong] nominal values in Agr are available to the three groups of DS speakers. Second, contact with English does not seem to promote a higher percentage of overt subjects, i.e. a change towards [- strong] nominal values in Agr. This is also true if one observes the social variables in the bilingual group: language at home and language comfort level. In both cases, those bilingual participants who reported speaking only Spanish at home and preferring speaking Spanish (over Spanish and English) show higher percentages of overt subjects than the bilingual speakers who showed some

preference for using English along with Spanish. Therefore, in interrogative sentences, the phonologically null subject phenomenon does not seem to be influenced by English contact.

The second *pro*-drop property under study that shows statistically significant data was the inversion of the subject and the verb in declarative sentences. The most important finding observed in this property is the possibility that pronominal subjects are becoming clitics of the verb in the three groups of speakers.[248] The high percentage of preverbal pronominal subjects is specially observed in the tasks testing the participants' performance. But this cliticization proposal will require further studies that examine if the subject and the verb can be separated or if they cannot. In the case that they can be separated, then one could propose that the DS speakers of the three varieties may have adopted the [- strong] verbal features in T (proper of English-like languages). But in the case that the subject and the verb cannot be separated by any element (such as a negation, or certain adverbs), then one could propose that these preverbal pronominal subjects are clitics of the verb.

No conclusions can be reached on the other two *pro*-drop properties (expletives and *that*-trace filter), due to a lack of statistical significance in the results.

With regard to how language contact can affect the *pro*-drop properties examined in this study, one can observe that the properties normally attached to the null subject parameter are affected differently in a language contact situation. This difference can be caused by two factors: first, these properties are not part of the same cluster of properties

[248] The Santo Domingo group and the bilingual group show similar percentages of preverbal pronominal subjects in the tasks testing their performance and their competence in declarative sentences. However, the El Cibao group shows different results in these two types of tasks (performance and competence), and the possible cliticization process is observed in their performance, but not in their competence.

of the *pro*-drop parameter; or second, if they form a cluster of properties, some of these properties are more easily affected by a language contact situation than others. In the latter case, in my study, the subject-verb inversion property is more easily affected by English than the phonologically null subject property.

Appendix 1.

Table A.1.1. Morphological ambiguity in GS tenses

		1st conjugation	2nd conjugation	3rd conjugation
Indicative	Imperfect	**1sg hablaba** 2sg hablabas **3sg hablaba** 1 pl hablábamos 2 pl hablabais 3pl hablaban	**1sg comía** 2sg comías **3sg comía** 1 pl comíamos 2 pl comíais 3pl comían	**1sg servía** 2sg servías **3sg servía** 1 pl servíamos 2 pl servíais 3pl servían
	Conditional	**1sg hablaría** 2sg hablarías **3sg hablaría** 1 pl hablaríamos 2 pl hablaríais 3pl hablarían	**1sg comería** 2sg comerías **3sg comería** 1 pl comeríamos 2 pl comeríais 3pl comerían	**1sg serviría** 2sg servirías **3sg serviría** 1 pl serviríamos 2 pl serviríais 3pl servirían
Subjunctive	Present	**1sg hable** 2sg hables **3sg hable** 1 pl hablemos 2 pl habléis 3pl hablen	**1sg coma** 2sg comas **3sg coma** 1 pl comamos 2 pl comáis 3pl coman	**1sg sirva** 2sg sirvas **3sg sirva** 1 pl sirvamos 2 pl sirváis 3pl sirvan
	Present perfect	**1sg haya hablado** 2sg hayas hablado **3sg haya hablado** 1 pl hayamos hablado 2 pl hayáis hablado 3pl hayan hablado	**1sg haya comido** 2sg hayas comido **3sg haya comido** 1 pl hayamos comido 2 pl hayáis comido 3pl hayan comido	**1sg haya servido** 2sg hayas servido **3sg haya servido** 1 pl hayamos servido 2 pl hayáis servido 3pl hayan servido
	Imperfect	**1sg hablara** 2sg hablaras **3sg hablara** 1 pl habláramos 2 pl hablarais 3pl hablaran	**1sg comiera** 2sg comieras **3sg comiera** 1 pl comiéramos 2 pl comierais 3pl comieran	**1sg sirviera** 2sg sirvieras **3sg sirviera** 1 pl sirviéramos 2 pl sirvierais 3pl sirvieran
	Pluperfect	**1sg hubiera hablado** 2sg hubieras hablado **3sg hubiera hablado** 1pl hubiéramos hablado 2 pl hubierais hablado 3pl hubieran hablado	**1sg hubiera comido** 2sg hubieras comido **3sg hubiera comido** 1pl hubiéramos comido 2 pl hubierais comido 3pl hubieran comido	**1sg hubiera servido** 2sg hubieras servido **3sg hubiera servido** 1pl hubiéramos servido 2 pl hubierais servido 3pl hubieran servido
	Future*	**1sg hablare** 2sg hablares **3sg hablare** 1 pl hablaremos 2 pl hablareis 3pl hablaren	**1sg comiere** 2sg comieres **3sg comiere** 1 pl comiéremos 2 pl comiereis 3pl comieren	**1sg sirviere** 2sg sirvieres **3sg sirviere** 1 pl sirviéremos 2 pl sirviereis 3pl sirvieren
	Future perfect*	**1sg hubiere hablado** 2sg hubieres hablado **3sg hubiere hablado** 1pl hubiéremos hablado 2 pl hubiereis hablado 3pl hubieren hablado	**1sg hubiere comido** 2sg hubieres comido **3sg hubiere comido** 1 pl hubiéremos comido 2 pl hubiereis comido 3pl hubieren comido	**1sg hubiere servido** 2sg hubieres servido **3sg hubiere servido** 1 pl hubiéremos servido 2 pl hubiereis servido 3pl hubieren servido

* These two tenses are rarely used in Modern Spanish.

Table A.1.2. Morphological ambiguity in DS tenses

		1st conjugation	2nd conjugation	3rd conjugation
Indicative	Present	1sg hablo **2sg habla** **3sg habla** 1 pl hablaríamos 2 pl hablaríais 3pl hablarían	1sg como **2sg come** **3sg come** 1 pl comemos 2 pl coméis 3pl comen	1sg sirvo **2sg sirve** **3sg sirve** 1 pl servimos 2 pl servís 3pl sirven
	Future	1sg hablaré **2sg hablará** **3sg hablará** 1 pl hablaríamos 2 pl hablaríais 3pl hablarían	1sg comeré **2sg comerá** **3sg comerá** 1 pl comeremos 2 pl comeréis 3pl comerán	1sg serviré **2sg servirá** **3sg servirá** 1 pl serviremos 2 pl serviréis 3pl servirán
	Imperfect	**1sg hablaba** **2sg hablaba** **3sg hablaba** 1 pl hablábamos 2 pl hablabais 3pl hablaban	**1sg comía** **2sg comía** **3sg comía** 1 pl comíamos 2 pl comíais 3pl comían	**1sg servía** **2sg servía** **3sg servía** 1 pl servíamos 2 pl servíais 3pl servían
	Conditional	**1sg hablaría** **2sg hablaría** **3sg hablaría** 1 pl hablaríamos 2 pl hablaríais 3pl hablarían	**1sg comería** **2sg comería** **3sg comería** 1 pl comeríamos 2 pl comeríais 3pl comerían	**1sg serviría** **2sg serviría** **3sg serviría** 1 pl serviríamos 2 pl serviríais 3pl servirían
Subjunctive	Present	**1sg hable** **2sg hable** **3sg hable** 1 pl hablemos 2 pl habléis 3pl hablen	**1sg coma** **2sg coma** **3sg coma** 1 pl comamos 2 pl comáis 3pl coman	**1sg sirva** **2sg sirva** **3sg sirva** 1 pl sirvamos 2 pl sirváis 3pl sirvan
	Present perfect	**1sg haya hablado** **2sg haya hablado** **3sg haya hablado** 1 pl hayamos hablado 2 pl hayáis hablado 3pl hayan hablado	**1sg haya comido** **2sg haya comido** **3sg haya comido** 1 pl hayamos comido 2 pl hayáis comido 3pl hayan comido	**1sg haya servido** **2sg haya servido** **3sg haya servido** 1 pl hayamos servido 2 pl hayáis servido 3pl hayan servido
	Imperfect	**1sg hablara** **2sg hablara** **3sg hablara** 1 pl habláramos 2 pl hablarais 3pl hablaran	**1sg comiera** **2sg comiera** **3sg comiera** 1 pl comiéramos 2 pl comierais 3pl comieran	**1sg sirviera** **2sg sirviera** **3sg sirviera** 1 pl sirviéramos 2 pl sirvierais 3pl sirvieran
	Pluperfect	**1sg hubiera hablado** **2sg hubiera hablado** **3sg hubiera hablado** 1pl hubiéramos hablado 2 pl hubierais hablado 3pl hubieran hablado	**1sg hubiera comido** **2sg hubiera comido** **3sg hubiera comido** 1pl hubiéramos comido 2 pl hubierais comido 3pl hubieran comido	**1sg hubiera servido** **2sg hubiera servido** **3sg hubiera servido** 1pl hubiéramos servido 2 pl hubierais servido 3pl hubieran servido
	Future*	**1sg hablare** **2sg hablare** **3sg hablare** 1 pl hablaremos 2 pl hablareis 3pl hablaren	**1sg comiere** **2sg comiere** **3sg comiere** 1 pl comiéremos 2 pl comiereis 3pl comieren	**1sg sirviere** **2sg sirviere** **3sg sirviere** 1 pl sirviéremos 2 pl sirviereis 3pl sirvieren

	Future perfect*	**1sg hubiere hablado** **2sg hubiere hablado** **3sg hubiere hablado** 1pl hubiéremos hablado 2 pl hubiereis hablado 3pl hubieren hablado	**1sg hubiere comido** **2sg hubiere comido** **3sg hubiere comido** 1 pl hubiéremos comido 2 pl hubiereis comido 3pl hubieren comido	**1sg hubiere servido** **2sg hubiere servido** **3sg hubiere servido** 1 pl hubiéremos servido 2 pl hubiereis servido 3pl hubieren servido

* These two tenses are rarely used in Modern Spanish.

Appendix 2. Definition of variables

A.2.1. Linguistic variables

A.2.1.1. Instruments for linguistic data collection

The different instruments used to gather the linguistic corpus were coded as follows:

1 = A-test (GJ task)
2 = B-test (GJ task)
3 = C-test (GJ task)
4 = Role play ('court' task)
5 = Personal narrative
6 = Frog story

Three instruments gathered data on interrogative sentences (A-test, B-test, role-play), and another three instruments were designed to collect data about declarative sentences (C-test, personal narrative, frog story). In addition to that, some tasks measure the participants' competence on the properties of *pro*-drop (A-test, B-test, and C-test), and the other three tasks measure the participants' use of these *pro*-drop properties (the three oral tasks: role-play, personal narrative, and frog story). See chapter 3 for further details about each data collection instrument.

A.2.1.2. Subject type

This variable focuses on the overt versus null nature of subjects. In the latter case, a distinction is made between pronominal and lexical DPs. The subject type variable was coded according to the following set of factors:

1 = Null subject	*Luego me casé otra vez.*[249] (Participant # 105)
2 = Pronoun	*Yo le dije que sí.*[250] (Participant # 103)
3 = Lexical DP	*El hombre iba adelante jalándola*.[251] (Participant # 118)
4 = N/A 'Ninguna'	

The coding of this variable is self-explanatory and illustrated by the first three examples. Factor '4' was included to code some of the items in two of the GJ tasks (A and B tests). These two GJ tasks test the *that*-trace filter. Since speakers might find none of the alternatives for *that*-trace effect examples acceptable, the option "N/A '*Ninguna*'" ('None') was included (See chapter 3). It should be noted that in the A-test, null subjects are not included in the task. In the other five tasks, any of the factors 1-3 above (null subject, pronoun, lexical DP) can appear (See chapter 3).

A.2.1.3. Position of subject

For overt subjects, the preverbal or postverbal position was coded as follows:

1 = Preverbal	*El hombre iba adelante jalándola*.[252] (Participant # 118)
2 = Postverbal	*Vinieron <u>mis primos</u> de Puerto Plata*.[253] (Participant # 109)
3 = Null	*Luego me casé otra vez.*[254] (Participant # 313)
4 = N/A 'Ninguna'	

---

[249] *Luego me casé otra vez.*
Then married again
'Then I married again.'

[250] *Yo le dije que sí.*
I him told that yes
'I told him yes'/ 'I agreed with him.'

[251] *El hombre iba adelante jalándola*.
The man was in front pulling-it-fem
'The man was pulling it in front of me.'

[252] Refer to footnote 252.

[253] *Vinieron <u>mis primos</u> de Puerto Plata*.
Came my cousins from Puerto Plata
'My cousins came from Puerto Plata.'

[254] Refer to footnote 250.

The first three options were used to mark the position of subjects in the three GJ tasks, and in all the oral data. Although, the "N/A '*Ninguna*'" ('None') option was part of only two GJ tasks (A and B tests), where the violation of the *that*-trace filter is tested.

A.2.1.4. Subject person and number

Person and number were coded as follows:

1 = *Yo* ('I')
2 = *Tú* ('you-sg informal')
3 = *Él/ella* ('he/she')
4 = *Ello* ('it', expletive)
5 = *Usted* ('you-sg formal')
6 = *Ustedes* ('you-pl formal')
7 = *Nosotros/-as* ('we')
8 = *Ellos/-as* ('they')
9 = *Uno* ('one')
10 = Other (demonstratives, collectives, other)
11 = Not clear

The coding of the factors 1-8 is self explanatory. Factor '9' was used to code the non-specific subject '*uno*' ('one'). Factor '10' was used to refer to any other subject, different from 1-10. Finally, the coding of the data as factor '11' was used when the referent of the subject was not clear, either because there was morphological or textual ambiguity. Factors 1-8 were distributed across the three GJ tasks, except for '*ello*' (expletive), which was only present in the B and C tests (see chapter 3 for further details). In the three oral tasks (role-play, personal narrative, and frog story), all person and number subjects could

appear. However, the different oral tasks privileged the elicitation of some person and number subjects over others. See chapter 3 for a detailed description of each task.

A.2.1.5. Sentence type

The type of sentence was coded as follows:

1= Wh-adjunct	'*¿A qué hora llegó usted?*' (What time did you arrive?)
2= Wh-argument	'*¿Qué quieres?*' (What do you want?)
3= Yes/No question	'*¿Te vienes?*' (Are you coming?)
4= Declarative	*El hombre iba adelante jalándola*.[255] (Participant # 118)

Since factors 1-3 refer to different types of interrogative sentences, they were used to code three different tasks: GJ A-test, B-test, and the oral role-play task. On the other hand, factor 4 'Declarative' was used to code the other three tasks: GJ C-test, the personal story, and the frog-story.

A.2.2. Social factors

Different social factors are studied in this dissertation. Some of them may affect DS in contact (spoken by DS bilinguals). This factor is examined under the 'patterns of language use'. Some others may affect DS as spoken by monolinguals in the island. These factors are examined as: age, geographical area in the Dominican Republic, and education level. A brief overview of these variables is presented below.

[255] Refer to footnote 252.

A.2.2.1. Residence of the participants

The residence of the participants coincides with the data collection setting, i.e. with the place where the linguistic corpus was obtained. This factor was coded as follows:

1 = El Cibao (Dominican Republic)
2 = Santo Domingo (Dominican Republic)
3 = New Brunswick (N.J., United States)

A.2.2.2. Monolingual vs. bilingual group

Some of the research questions and hypotheses pursued in this dissertation (see chapter 1) refer to the difference between the monolingual and the bilingual group. Consequently, this factor is coded as follows:

1 = Monolingual (residing in the Dominican Republic)
2 = Bilingual (students residing in New Brunswick, N.J.)

The monolingual group includes the two groups of participants residing in the Dominican Republic, i.e. the speakers from El Cibao and Santo Domingo. The bilingual group of participants is formed by DS-English bilingual students residing in New Brunswick, N.J.

A.2.2.3. Relevant to bilinguals (patterns of language use): language contact

The language contact variable refers to the linguistic input received by the DS bilingual participants. This variable was coded as follows:

1 = Caribbean Spanish varieties
2 = Caribbean Spanish and General Spanish varieties

When the DS bilingual participants reported that their linguistic input came mainly from CS speakers, from DS and other CS varieties (Cuba and Puerto Rico), they were coded as factor '1'. On the other hand, when their linguistic contact not only included CS varieties, but also GS varieties (such as Mexican, Venezuelan, Peruvian, etc.), factor '2' was coded.

A.2.2.4. Relevant to bilinguals (patterns of language use): language spoken at home

This social variable is only considered among the bilingual DS speakers, and it was coded as follows:

1 = Spanish
2 = English
3 = Both (Spanish and English)

The coding of this variable is self-explanatory.

A.2.2.5. Relevant to bilinguals (patterns of language use): language comfort level

I define language comfort level as the language that the participants feel more comfortable using, as self-reported by the participants. The researcher asked the participants: *¿En qué lengua te sientes más cómod/a?* ('In which language do you feel more comfortable?'). This variable was analyzed under the following factors:

1= Spanish
2= English
3= Both (Spanish and English)

The coding of this variable into the factors 1-3 above is self-explanatory.

A.2.2.6. Relevant to monolinguals: geographical area in the Dominican Republic

This variable is divided into two factors, according to the geographical area where they lived at the time of the interview:

1 = El Cibao
2 = Santo Domingo

The coding of this variable coincides with the geographical area in the Dominican Republic where the participants lived most of their lives.

A.2.2.7. Relevant to monolinguals: age

The participants interviewed in this study are 18 or older, and their age ranges from 18 to 73. See chapter 3 for further details about the participants' bio-linguistic data. The 'age' variable was coded into the following self-explanatory factors:

1 = 18-29
2 = 30-39
3 = 40-50
4 = Over 50

This variable is considered only for the participants from El Cibao.

A.2.2.8. Relevant to monolinguals: educational level

The level of education is a social variable only coded in the case of the Santo Domingo participants. This information was also gathered through the participants' biographical/biolinguistic questionnaire. The educational level refers to the maximum level of education achieved by the participants, and it was coded as follows:

1 = Elementary education (finished and not finished)
2 = Secondary education and Vocational school
3 = University education (finished BA or in progress)

Refer to chapter 3 for further details on the specification of each factor.

A.2.3. Included and excluded elements

The analysis of the linguistic data is based on the different realizations (overt vs. null, preverbal vs. postverbal) of subjects in sentences with finite verbs. It also includes the overt versus null realization of complementizers in the A-test and the B-test. In all tasks, the subjects analyzed were [+ human], except in the frog story task. In the retelling of the frog story, many animals come into play, so all [+ animate] subjects were coded (both [+ human] and [- human]). So, in the end, all were [+ animate].[256] The elements that have been excluded in this study are the following:

- Non-finite verbal forms:

  (...) y las avispas comiéndome la espalda.[257] (Participant # 9)

- Verb '*gustar*' and the like ('*encantar*'):

  Me gustaba caminar demasiado.[258] (Participant # 16)

- Verbs in adjectival subordinate sentences:

  (…) y viene un turista, que parecía un monstruo, (...).[259] (Participant # 9)

---

[256] Many other studies (Bayley and Pease-Álvarez, 1997; Cameron, 1992; Flores-Ferrán, 2002) have studied a more restricted envelope of variation, excluding those cases in which "pronouns are obligatorily expressed or are obligatorily absent" (Flores-Ferrán, 2002, p.19). I consider these studies' reasoning as valuable as the one followed in this study.

[257] *(...) y las avispas comiéndome la espalda.*
(...) and the wasps eating-me the back
'(...) and the wasps biting me on the back.'

[258] *Me gustaba caminar demasiado.*
Liked to walk a lot
'I liked walking a lot.'

[259] *(…) y viene un turista, que parecía un monstruo, (...).*
(...) and comes a turist, that looked a monster, (...)
'(...) and a turist came, who looked like a monster, (...)'

- Focal clefts:

  Mi padre lo que tiene es finca de cacao.[260] (Participant # 9)

- Subordinate sentences

  Hay que investigar qué persona fue que lo mató…[261] (Participant # 16)

- Passive sentences, and '*se*' constructions.

  ¿Se escuchaban gritos?[262] (Participant #110)

- **[-** animate] subjects (also, sentential subjects)

  [...] *¿cómo era la relación entre esa pareja?* [...][263] (Participant # 110)

  ¿La que estaba nerviosa era la esposa?[264] (Participant # 113)

- [- human, - animate]: In all tasks, the coded subjects are [+ human], except in the oral frog story where all [+ animate] subjects were considered, since the animals were treated as anthropomorphic.

- Wh- words as subjects, such as '*quién*' ('who').

  ¿Quiénes estaban en la escena del crimen?[265] (Participant # 203)

---

[260] *Mi padre lo que tiene es finca de cacao.*
My father it what has is land of cocoa.
'What my father has is a piece of cocoa land.'

[261] *Hay que investigar qué persona fue que lo mató…*
There that to investigate which person was that him killed...
'One needs to investigate who killed him...'

[262] *¿Se escuchaban gritos?*
Pass-pron listened screams?
'Were sceams listened?'

[263] [...] *¿cómo era la relación entre esa pareja?* [...]
[...] how was the relationship between this couple? [...]
'[...] How was the relationship between this couple? [...]'

[264] *¿La que estaba nerviosa era la esposa?*
The who was nervous was the wife?
'Was the wife the one who was nervous?'

[265] *¿Quiénes estaban en la escena del crimen?*
Who-pl were on the scene of the crime?
'Who was on the scene of the crime?'

- Verbs with no morphological ending, because the verbal form is not fully elicited.

  Oh. ¿Él tení... él sospechaba más o menos, pero no sabía quién era?[266] (Participant # 200)

- In each task, only one type of sentence was studied; i.e., each task was designed to measure the use of subjects in one type of sentence. For instance, the A-test, B-test, and role-play were used to measure the use of subjects in interrogative sentences. Therefore, if statements were produced in the role-play, the subjects in those declarative sentences were not entered in the coding. On the other hand, I only coded the subjects of declarative sentences in the C-test, the personal narrative, and the frog story. If an interrogative sentence appears in the personal story or in the frog story, the subjects in those interrogative sentences were not considered in the coding.[267]

- Orally repeated verbs, when the participant hesitated, and the production of the subject was not finished. Normally it was the first verb(s) in the hesitation, such as example 4.21. below, in which the first '*murió*' ('died') was not included, since the overt production of the subject was not completed.

  ¿A qué hora murió esa… murió la joven?[268] (Participant # 301)

---

[266] *Oh. ¿Él tení... él sospechaba más o menos, pero no sabía quién era?*
Oh. He ha(d)... he suspected more or less, but not knew who was
'Oh. He ha(d)... he suspected a bit, but he did not know who was it?'

[267] Refer to chapter 3 for further details on the function of each task.

[268] *¿A qué hora murió esa… murió la joven?*
At what time died this-fem... died the woman?
'At what time did this... the woman die?'

Appendix 3.

Table A.3.1. Summary of total number of verbs in all tasks

	Items in tasks	Task	Number of verbs		
Dominican Spanish/English Bilinguals	Overt/Null Preverbal/Postverbal	A test	585	1977	3945
		B test	695		
		C test	697		
	Expletives	B test	61	103	
		C test	42		
	That-trace filter	A test	83	169	
		B test	86		
	Oral 'court'		396	1696	
	Oral 'personal'		1000		
	Oral 'frog'		300		
El Cibao (Monolinguals)	Overt/Null Preverbal/Postverbal	A test	543	1727	3622
		B test	561		
		C test	623		
	Expletives	B test	61	102	
		C test	41		
	That-trace filter	A test	80	160	
		B test	80		
	Oral 'court'		382	1633	
	Oral 'personal'		956		
	Oral 'frog'		295		
Santo Domingo (Monolinguals)	Overt/Null Preverbal/Postverbal	A test	540	1722	3617
		B test	562		
		C test	620		
	Expletives	B test	62	102	
		C test	40		
	That-trace filter	A test	80	160	
		B test	80		
	Oral 'court'		382	1633	
	Oral 'personal'		956		
	Oral 'frog'		295		
TOTAL					**11184**

Bibliography

Adams, M. (1987a). *Old French, null subjects and verb-second phenomena.* Doctoral dissertation. Los Angeles, CA: UCLA.

Adams, M. (1987b). From Old French to the theory of pro-drop. *Natural Language and Linguistics theory, 5*, 1-32.

Alba, O. (1980). Sobre la validez de la hipótesis funcional: datos del español de Santiago. *Boletín de la Asociación Puertorriqueña de la Lengua Española VIII, 2*, 1-11.

Alba, O., ed. (1982a). *El español del Caribe*. Santiago de los Caballeros: Universidad Católica Madre y Maestra.

Alba, O. (1982b). Función del acento en el proceso de elisión de la /s/ en la República Dominicana. In Alba, O. (Ed.), *El español del Caribe*. Santiago de los Caballeros: Universidad Católica Madre y Maestra.

Alexiadou, A., and Anagnostopoulou, E. (1998). Parametering Agr: word order, v-movement and EPP checking. *Natural language and linguistic theory, 16,* 491-539.

Allen, S. (2000). A discourse pragmatic explanation for argument representation in child Inuktitut. *Linguistics, 38,* 483-521.

Álvarez Blanco, R., Monteagudo, H., and Regueira, X. L. (1986). *Gramática galega*. Vigo, Galaxia.

Álvarez Nazario, M. (1972). *La herencia lingüística de Canarias en Puerto Rico. Estudio histórico-dialectal.* San Juan de Puerto Rico: Instituto de cultura puertorriqueña.

Álvarez Nazario, M. (1974). *El elemento afronegroide en el español de Puerto Rico*. San Juan: Instituto de Cultura Puertorriqueña.

Álvarez Nazario, M. (1978). El español de puertorriqueños en Nueva York. In J. Fernández Sevilla, et al. (Eds.), *Philologica Hispaniensia: in Honorem Manuel Alvar: I Dialectología* (pp. 69-80). Madrid: Gredos.

Álvarez Nazario, M. (1990). *El habla campesina del país: Orígenes y desarrollo del español en Puerto Rico*. Río Piedras, P.R.: Universidad de Puerto Rico.

Álvarez, R. (1981). *O pronome persoal en galego*. Doctoral dissertation. Santiago de Compostela, Spain: Universidad Santiago de Compostela.

Álvarez, R. (2001). El vai ben así: pervivencia e construcciónes de el invariable. *Cadernos de lingua, 23*, 5-33.

Álvarez, R., Monteagudo, H., Reguerira, X. L. (1986). *Gramática galega*. Vigo, Spain: Galaxia.

Álvarez, R., and, Xove, X. (2002). *Gramática da lingua galega.* Vigo: Galaxia.

Andrade, M. J. (1930). *Folk-lore from the Dominican Republic*, N.Y.: American Folk-lore Society, G. E. Stetchert and Co., vol. 23, 404-419.

Arnaiz, A. (1992). On word order in wh-questions in Spanish. In A. Kathol, and J. Beckman (Eds). *MIT working papers in linguistics, 16*, 1-10.

Ávila-Jiménez, B. (1996). *Subject pronoun expression in Puerto Rican Spanish: a sociolinguistic, morphological, and discourse analysis*. Doctoral dissertation. Ithaca, New York: Cornell University.

Barnes, B. K. (1986). An empirical study of the syntax and pragmatics of left dislocations in spoken French. In O. Jaeggli and C. Silva-Corvalán (Eds.). *Studies in romance linguistics* (pp. 207–24). Dordrecht, Foris.

Barrenechea, A. M., and Alonso, A. (1977). Los pronombres personales sujeto en el español hablado en Buenos Aires. In Lope Blanch, J. M. (Ed.), *Estudios sobre el español hablado en las ciudades principales de América* (pp. 333-349). México: Universidad Nacional Autónoma de México.

Bayley, R., and Pease-Álvarez, L. (1996). Null pronoun variation in Mexican-descendent children's narrative discourse. In J. Arnold, R. Blake, and B. Davidson (Eds.) *Sociolinguistic variation: data, theory, and analysis* (pp. 85-99). Stanford: CSLI Publications.

Bello, A. (1947). *Gramática de la lengua castellana.* México: Editora nacional.

Benedicto, E. (1993). *The (IP) functional projections and the identification of* pro. Ms. University Mass.

Bentivoglio, P., and Weber, E. G. (1986). A functional approach to subject word order in spoken Spanish. In O. Jaeggli, and C. Silva-Corvalán (Eds.), *Studies in Romance Linguistics* (pp. 23-40). Dordrect, Holland and Riverton, U.S.: Foris Publications.

Bentivoglio, P. (1987). *Los sujetos pronominales de primera persona en el habla de Caracas.* Caracas: Universidad Central de Venezuela, Consejo de Desarrollo Científico y Humanístico.

Bentivoglio, P. (1988). La posición del sujeto en el español de Caracas: Un análisis de los factores lingüísticos y extralingüísticos. In R. Hammond, M. Resnick (Eds.), *Studies in the Caribbean dialectology* (pp. 13-23). Washington: Georgetown.

Bergen, J. J. (1976). The explored and unexplored facets of questions such as “Qué tú tienes?.” *Hispania, 59*, 1, 93-99.

Berlink, R. A. (1989). A construção V SN no Português do Brasil: uma visão diacrônica do fenômeno da ordem. In F. Tarallo (Ed.), *Fotografias sociolingüísticas.* Campinas, SP: Pontes Editores.

Berlink, R. A. (1996). *La position du sujet en portugais: étude diachronique des varietés brésilienne et européene*. Doctoral dissertation. Leuven: Katholieke Universiteit.

Bernard, H. R. (2000). *Social research methods: Qualitative and quantitative approaches*. Sage publications: California (U.S.).

Bloomfield, L. (1933). *Language*. New York: Holt, Rinehart, and Winston.

Bosque, I., and Demonte, V. (1999). *Gramática descriptiva de la lengua española.* Madrid: Espasa-Calpe.

Büring, D. and Gutiérrez-Bravo, R. (2001). Focus-related word order variation without the NSR: A prosody-based crosslinguistic analysis. In S. M. Bholscaidh (Ed.), *Syntax and semantics at Santa Cruz, volume 3* (pp. 41-51). LRC: Linguistics Department, U.C. Santa Cruz.

Burzio, L. (1986). *Italian syntax.* Dordrecht: D. Reidel publishing company.
Cabré Sans, Y. And Gavarró, A. (2006). Subject distribution and verb classes in child Catalan. *Cascadilla Proceedings Project*, online version: http://seneca.uab.es/ggt/Reports/GGT-06-23.pdf (Retrieved Jan, 30, 2007)

Camacho, J. (2006). Do subjects have a place in Spanish. In C. Nishida, and J. P. Y. Montreuil (Eds.), *New Perspectives on Romance Linguistics: Vol. I: Morphology, Syntax, Semantics, and Pragmatics, xiv* (pp. 51-66). Amsterdam/Philadelphia: John Benjamins.

Cameron, R. (1992). *Pronominal and null subject variation in Spanish: Constraints, dialects, and functional compensation*. Doctoral dissertation. Philadelphia, PA: University of Pennsylvania.

Cameron, R. (1993). Ambiguous agreement, functional compensation, and nonspecific *tú* in the Spanish of San Juan, Puerto Rico, and Madrid, Spain. *Language variation and change, 5,* 305-334.

Cameron, R. (1996). A preposed explanation of the Specific/Nonspecific TÚ constraint ranking in Spanish. *Working papers in linguistics, 3*, 1, 25-42.

Carballo Calero, R. (1966). *Gramática elemental del gallego común*. Galaxia: Vigo.

Cardinaletti, A. (1997). Subjects and clause structure. In L. Haegeman (Ed.), *The new comparative syntax* (pp. 33-63). New York: Longman.

Cardinaletti, A., and Starke, M. (1999). The typology of structural deficiency: A case study of the three classes of pronouns. In H. van Riemsdijk (Ed.), *Clitics in the languages of Europa* (pp. 145-233). Berlin: Mouton de Gruyter.

Carrilho, E. (2005). *Expletive 'ele' in European Portuguese dialects*. Doctoral dissertation. Lisboa, Portugal: Universidade de Lisboa.

Celce-Murcia and Larsen Freeman (1999). *The grammar book: An ESL/EFL teacher's course*. US: Heinle and Heinle.

Censo de población y vivienda 2002: Resultados definitivos VIII http://www.one.gob.do/index.php?option=com_docman&task=cat_view&gid=80&Itemid=230 (Retrieved: 4-12-2006)

Chomsky, N. (1981). *Lectures on government and binding*. Dordrecht: Foris.

Chomsky, N. (1982). *Some concepts and consequences of the theory of government and binding*. Cambridge: MIT press.

Chomsky, N. (1986). *Barriers.* Cambridge, Mass.: MIT Press.

Chomsky, N. (1991). Some notes on economy of derivation and representation. *MIT working papers on linguistics,* 10, 43–74.

Chomsky, N. (1995). *The Minimalist Program*. Cambridge, Mass.: MIT Press.

Chomsky, N. (2002). *On Nature and Language*. UK: Cambridge University Press.

Chomsky, N., and Lasnik, H. (1977). Filters and control. *Linguistic inquiry, 8*, 425-504.

Clyne, M. (2003). *Dynamics of Language Contact: English and Immigrant Languages*. UK: Cambridge University Press.

Cohen, L., Manion, L. and Morrison, K. (2000). *Research methods in education*. London: Routledge/Falmer.

Contreras, H. (1976). *A theory of word order with special reference to Spanish*. The Hague: North Holland.

Contreras, H. (1978). *El orden de palabras en español*. Madrid: Cátedra.

Contreras, H. (1989). Closed Domains. *Probus, 1*, 163-180.

Contreras, H. (1991). On the position of subjects. In S. Rothstein (Ed.), *Perspectives on phrase structure: heads and licensing* (pp. 63-80). New York: Academic press.

Cyrino, S. M. L., Duarte, M. E. L., and Kato, M. A. (2000). Visible subjects and invisible clitics in Brazilian Portuguese. In M.A. Kato and E.V. Negrão (Eds.), *Brazilian Portuguese and the null subject parameter* (pp. 55-73). Frankfurt am Main, Vervuert/ Madrid, Iberoamericana.

Davidson, B. (1996). 'Pragmatic weight' and Spanish subject pronouns: the pragmatic and discourse used of *tú* and *yo* in spoken Madrid Spanish. *Journal of pragmatics, 26*, 543-565.

Davis, J. C. (1971). Tú, ¿Qué tú tienes?. *Hispania, 54*, 331-334.

De Oliveira, M. (2000). The pronominal subject in Italian and Brazilian Portuguese. In M. A. Kato and E. V. Negrão (Eds.), *Brazilian Portuguese and the null subject parameter* (pp. 37-53). Vervuert: Iberoamericana.

D'Introno, F. (1989). Empty and full pronouns in Spanish. *Hispanic linguistics, 3,* 27-47.

Downing, D. and Clark, J. (1989). *Statistics the easy way*. Barron's Educational Series: New York.

Duarte, M. E. L. (1992). A perda da ordem V(erbo) S(ujeito) em interrogativeas qu- no português do Brasil. *DELTA, 8*, 37-52.

Duarte, M. E. L. (1993). Do pronome nulo ao pronome pleno. In I. Roberts, and M.A. Kato (Eds.), *Português brasileiro: uma viagem diacrônica (Homenagem a Fernando Tarallo)* (pp. 107-28). Campinas, SP: UNICAMP.

Duarte, M. E. L. (1995). A perda do principio 'evite pronome' no português brasileiro. Doctoral dissertation. Campinas, SP: UNICAMP.

Duarte, M. E. L. (2000). The loss of the 'avoid pronoun' principle in Brazilian Portuguese. In M. A. Kato and E. V. Negrão (Eds.), *Brazilian Portuguese and the null subject parameter* (pp. 17-36). Vervuert: Iberoamericana.

Dufresne, M. and Dupuis, F. (1996). Between syntax and phonology: subject pronouns in French. In C. Parodi, C. Quicoli, M. Saltarelli, and M. L. Zubizarreta (Eds.), *Aspects of Romance linguistics* (pp. 195-211). Washington, DC: Georgetown University Press.

Du Bois, J. W. (1987). The discourse basis of ergativity. *Language, 63,* 805 – 855.

Enríquez, E. (1984). *El pronombre personal sujeto en la lengua española en Madrid*. Madrid: Instituto Miguel de Cervantes.

Faarlund, J. T. (1990). *Syntactic change. Toward a theory of historical syntax (Trends in Linguistics: Studies and monographs)*. Berlin, New York: Mouton de Gruyter.

Faarlund, J. T. (1999). The notion of oblique subject and its status in the history of Icelandic. *Working papers in Scandinavian Syntax, 63*, 1 – 44.

Fernández Ramírez, S. (1951). *Gramática española. El Nombre*. Madrid, Arco-libros.

Flores-Ferrán, N. (2002). *A sociolinguistic perspective on the use of subject personal pronouns in Spanish narratives of Puerto Ricans in New York City*. Munich: Lincom-Europa.

Flores-Ferrán, N. (2004). Spanish subject personal pronoun use in New York City Puerto Ricans: Can we rest the case of English contact? *Language variation and change, 16*, 49 – 73.

Fontana, J. (1993). A residual A'-position in Spanish. *WCCFL 12*, 233-49.

Gathercole, V. C. M., and Montes, C. (1997). *That*-trace effects in Spanish- and English speaking monolinguals and bilinguals. *Contemporary perspectives on the acquisition of Spanish. Volume 1: developing grammars*. Ed. by A. Pérez-Leroux and W. R. Glass, 76-77. Somerville, MA: Cascadilla Press.

Gili Gaya, S. (1961). *Curso superior de sintaxis española*. Barcelona: Ediciones SPES.

Givón, T. (1983). Topic continuity in discourse: The functional domain of switch reference. In J. Haiman and P. Munro (Eds.), *Switch reference and universal grammar* (pp. 52-82). Amsterdam: John Benjamins.

Givón, T. (1984). The pragmatics of referentiality. In D. Schriffrin (Ed.), *Meaning, form and use in context: Linguistic applications* (pp. 120-138). Washington, Georgetown Univertity Press.

Goodall, G. (1991). Spec of IP and Spec of CP in Spanish Wh-questions. In M. Mithun, G. Perissinotto, and E. Raposo (Ed.), *Linguistics perspective on the romance languages* (pp. 1999 – 209). Amsterdam/Philadelphia: John Benjamins.

Goodall, G. (1999). On preverbal subjects in Spanish. In T. Satterfield, et al. (Eds.), *Current issues in Romance languages* (pp. 95 –110). Amsterdam: John Benjamins.

Goodall, G. (2004). On the syntax and processing of *wh*-questions in Spanish. In B. Schmeiser, V. Chand, A. Kelleher, and A. Rodriguez (Eds.), *WCCFL 23 Proceedings* (pp. 101-114). Sommerville, MA: Cascadilla Press.

Granda, G. (1987). Dos rasgos dialectales del español dominicano en el siglo XVIII. *Lingüística española actual, 9*, 235 – 241.

Grinstead, J. (2000). Case, inflection and subject licensing in child Catalan and Spanish. *Journal of child language, 27* (1), 119-156.

Gutiérrez-Bravo, R. (2003). Subject inversion in Spanish relative clauses. A case of prosody-induced word order variation without narrow focus. In T. Geerts, and H. Jacobs (Eds.), *Romance langauges and linguistics theory* (pp. 150-66). Amsterdam: John Benjamins.

Gutiérrez-Bravo, R. (2007). Prominence scales and unmarked word order in Spanish. *Natural language and linguistic theory, 25*, 235–271.

Hadlich, R. (1975). *Gramática transformativa del español.* Madrid: Gredos.

Haegemann, L. (1990). Subject pronouns and subject clitics in West Flemish. *The linguistic review, 7*, 333-363.

Haegemann, L. (1991). *Introduction to government and binding theory.* Oxford: Basil Blackwell.

Haegemann, L. (1997). *Elements of Grammar*. Dordrecht: Kluwer.

Haider, H. and Prinzhorn, M. (1986) (Eds). *Verb Second Phenomena in Germanic Languages*. Dordrecht: Foris.

Haugen, E. (1953). *The Norwegian language in America: A study in bilingual behavior.* Philadelphia: University of Pennsylvania Press.

Hatcher, A. G. (1956). Theme and underlying question: two studies of Spanish word order. *Word, 12*, 3, 1-52.

Heap, D. J. (1990). Les questions a sujet pronominal préposé dans les dialects de l'espagnol des Caraibes. *Journal of the Atlantic provinces linguistic association, 12*, 13-38.

Henríquez-Ureña, P. (1939). Ello. *Revista de filología hispánica, 1*, 209-229.

Henríquez-Ureña, P. (1940). *El español en Santo Domingo*. Biblioteca de dialectología Hispanoamericana, Buenos Aires: Coni.

Hilles, S. (1986). Interlanguage and the *pro*-drop parameter. *Second language research, 2*, 33-52.

Hinzelin, M. O., and Kaiser, G. A. (2006). El pronombre 'ello' en el léxico del español dominicano. In W. Mihatsch, and M. Sokol (Eds.), *Lenguas en contacto y cambio léxico-gramatical en el Caribe: análisis de casos concretos –aspectos tipológicos- implicaciones teóricas.* Frankfurt am Main: Lang.

Hochberg, J. G. (1986). /S/ deletion and pronoun usage in Puerto Rican Spanish. In D. Sankoff (Ed.), *Diversity and diachronomy* (pp. 199-210). Amsterdam: John Benjamins.

Holm, J. A., Lorenzino, G. A., and De Mello, H. R. (1999). Diferentes grados de reestructuración en dos lenguas vernáculas: el español caribeño y el portugués brasileño. In Ortíz-López, L. A. (Ed.). *El caribe hispánico: perspectivas lingüísticas actuales* (43-60). Frankfurt: Vervuert Verlag.

Huang, C. T. J. (1984). On the distribution and reference of empty pronouns. *Lingusitic inquiry, 15,* 4, 531-74.

Hyams, N. (1986). *Language acquisition and the theory of the parameters.* Dordrecht: Reidel.

Jandrey Hertel, T. (2003). Lexical and discourse factors in the second language acquisition of Spanish word order. *Second language research, 19*, 4, 273 – 304.

Jaeggli, O. (1982). *Topics in romance syntax*. Dordrecht: Foris.

Jaeggli, O. and Safir, K. (1989). The null subject parameter and parametric theory. In O. Jaeggli and K. Safir (Eds.), *The null subject parameter* (pp. 1-44). Dordrecht, Holland: Kluwe Academic Publishers.

Jiménez, M. L. (1997). *Semantic and pragmatic conditions on word order in Spanish*. Doctoral dissertation. Washington, DC: Georgetown University.

Jiménez Sabater, M. (1975). *Más datos sobre el español en República Dominicana.* Santo Domingo: Ediciones Intec.

Jiménez Sabater, M. (1977). Estructuras morfosintácticas en el español dominicano: algunas implicaciones sociolingüísticas. *Ciencia y sociedad, II*, 1, 5-20.

Jiménez Sabater, M. A. (1984). *Más datos sobre el español de la República Dominicana. Editora UASD*. Santo Domingo, República Dominicana.

Jorge Morel, E. (1978). *Estudio lingüístico de Santo Domingo. Aportación a la geografía lingüística del Caribe e Hispanoamérica*. Santo Domingo: Editora Taller.

Kany, C. E. (1945). *American-Spanish syntax.* First edition. Chicago: University of Chicago press.

Kany, C. E. (1951). *American-Spanish syntax.* Second edition. Chicago: University of Chicago press.

Kany, C. E. (1969). *Sintaxis hispanoamericana*. Madrid: Gredos.

Kato, M. A. (1999). Strong and weak pronominals in the null subject parameter. *Probus, 11*, 1-27.

Kato, M. A. (2002). The partial pro-drop nature and the restricted VS order in Brazilian Portuguese. In M. A. Kato and E. V. Negrão (Eds.), *Brazilian Portuguese and the null subject parameter* (pp. 223-258). Verveuert: Iberoamericana.

Kayne, R. (1994). *The antisymetry of syntax*. Cambridge, Mass.: MIT Press.

Kempchinsky, P. (1985). Brazilian Portuguese and the null subject parameter. *Mester, 13*, 2. Department of Spanish and Portuguese, UCLA.

Kenstowicz, M. (1989). The null subject parameter in modern Arabic dialects. In O. Jaeggli and K. J. Safir (Eds.), *The null subject parameter* (pp. 263-75). Dordrecht: Kluwer Academic publishers.

Koopman, H. and Sportiche, D. (1991). The position of subjects. *Lingua, 85,* 211-58.

Lantolf, J. P. (1980). Evolutive change in syntax: interrogative word order in Puerto Rican Spanish. In F. H. Nuessel (Ed.), *Contemporary Studies in Romance Languages: Proceedings of the Eight Annual Symposium on Romance Languages* (pp. 202- 219). Indiana: Indiana University Lingusitics Club.

Lasnik, H., and Saito, M. (1984). On the nature of proper government. *Linguistic inquiry, 15*, 2, 235-289.

Levy, Y. and Vanikka, A. (1999/2000). The development of a mixed null subject system: a cross-linguistic perspective with data on the acquisition of Hebrew. *Language acquisition, 8*(4), 363-384.

Liceras, J. M. (1988). Syntax and stylistics: more on the pro-drop parameter. In J. Pankhurst, M. Sharwood Smith, and P. Van Buren (Eds.), *Learnability and second languages: a book of readings* (pp. 71-93). Dordrecht: Foris.

Lipski, J. M. (1977). Preposed subjects in questions: some considerations. *Hispania, 60*, 1, 61-67.

Lipski, J. M. (1994). *Latin American Spanish*. London: Longman.

Lipski, J. M. (1996). Patterns of pronominal evolution in Cuban-American bilinguals. In A. Roca, and J. B. Jehnsen (Eds.), *Spanish in contact: Issues in bilingualism* (pp. 159-186). Sommerville: Cascadilla Press.

Lizardi, C. M. (1993). *Subject position in Puerto Rican wh-questions: syntactic, sociolinguistic, and discourse factors*. Doctoral dissertation. Ithaca, NY: Cornell University.

Lopes Rossi, M. A. (1993). *A sintaxe diacrônica das interrogativas-Q do português.* Doctoral dissertation. Campinas, SP: UNICAMP.

López Morales, H. (1989). *Sociolingüística*. Madrid: Gredos.

Lozano, C. (2001). Knowledge of expletives and pronominal subjects by learners of Spanish. *Essex graduate student papers in language and linguistics*. Vol. 3, January. (http://www.essex.ac.uk/linguistics/pgr/egspll/volume3/pdf/lozano.pdf)

Luján, M. (1987). Clitic-doubling in Andean Spanish and the theory of case absortion. In T. Morgan, J. Lee, B. Van Patten (Eds.), *Language and language use: studies in Spanish* (pp. 109-21). Washington: University press of America.

Luján, M. (1999). Expresión y omisión del pronombre personal. In I. Bosque, V. Demonte (Eds.), *Gramática descriptiva de la lengua española* (pp. 1275-1315). Madrid: Espasa-Calpe.

Maandi, K. (1989). Estonian among immigrants in Sweden. In Dorian, N. C. (Ed.), *Investigating obsolesce: studies in language contraction and death* (pp. 227-42). Cambridge: Cambridge University Press.

MacNamara, J. (1966). *Bilingualism and primary education*. Edinburgh: Edinburgh University Press.

Marquez Reiter, R., and Placencia, M. E. (2005). *Spanish pragmatics*. Great Britain: Palgrave MacMillan.

Martín Zorraquino, M. L., and Lázaro, J. P. (1999). Los marcadores del discurso. In I. Bosque, and V. Demonte (Eds.), *Gramática descriptiva de la lengua española*, (pp. 4051 – 4213). Madrid: Espasa Calpe.

Mayer, M., and Mayer M. (1971). *A boy, a dog, a frog and a friend*. New York: Dial Press.

Montes-Miró, R. G. (1986). Los factores discursivos en el análisis de los pronombres personales sujeto en español. *Morphé, 2*, 45-71.

Montrul, S. (2004). *The Acquisition of Spanish. Morphosyntactic Development in Monolingual and Bilingual L1 Acquisition and in Adult L2 Acquisition.* [Series on Language Acquisition and Language Disorders]. Amsterdam: John Benjamins.

Morales, A. (1980). La expresión de sujeto pronominal, primera persona, en el español de Puerto Rico. *Boletín de la academia puertorriqueña de la lengua española, 8*, 91 –102.

Morales, A. (1986). *Gramáticas en contacto: análisis sintácticos sobre el español de Puerto Rico*. Madrid: Biblioteca de autores de Puerto Rico.

Morales, A. (1997). La hipótesis funcional y la aparición del sujeto no nominal: El español de Puerto Rico. *Hispania, 80*, 153-165.

Morales, A. (1999). Anteposición del sujeto en el español del Caribe. In Ortiz López, L. (Ed.), *El Caribe hispánico: perspectivas lingüísticas actuales* (pp. 77-98). Frankfurt: Vervuert Verlag.

Morgan, G. A., Leech, N. L., Gloeckner, G. W., and Barrett, K. C. (2006). *SPSS for introductory statistics: Use and interpretation*. Mahwah, N.J.: Lawrence Erlbaum Associates publishers.

Mufwene, S., and Gilman, C. (1987). How African is Gullah and why? *American Speech, 62*, 120-39.

Navarro Tomás, T. (1948). *El español de Puerto Rico*. First edition. Río Piedras: Universidad de Puerto Rico.

Navarro Tomás, T. (1966). *El español en Puerto Rico.* Río Piedras, P.R.: Universidad de Puerto Rico.

Negrão, E. V. and, Müller, A. L. (1996). As mudanças no sistema pronominal brasileiro: substituição ou especialização de formas. *DELTA, 12*, 1, 125-52.

Negrão, E. V., and Viotti, E. (2000). Brazilian Portuguese as a discourse-oriented language. In M. A. Kato and E. V. Negrão (Eds.), *Brazilian Portuguese and the null subject parameter* (pp. 105-156). Vervuert: Iberoamericana.

Núñez Cedeño, R. (1983). Pérdida de transposición de sujeto en interrogativas pronominales del español del Caribe. *Thesaurus, 38*, 35-57.

Núñez del Prado, Z., Foley, C. Proman, and R. Lust, B. (1994). Subordinate CP and pro-drop: evidence for degree-n learnability from an experimental study of Spanish and English. *Proceedings ofthe North East linguistic society (NELS), 2*, 443-60.

Ocampo, F. (1990). The pragmatics of word order in constructions with a verb and a subject. *Hispanic linguistics, 4*, 1, 87-127.

Ocampo, F. (1992). The word order of constructions with a verb, a subject, and a direct object in spoken Spanish. In J. Amastae, G. Goodall, M. Montalbetti, and M. Phinney (Eds.), *Contemporary research in Romance linguistics* (pp. 291-305). Amsterdam: John Benjamins.

Ocampo, F. (1995). The word order of two constituent constructions in spoken Spanish. In P. Downing, and M. Noonan (Eds.), *Word order in discourse* (pp. 425-447). Amsterdam: John Benjamins.

Olarrea, A. (1996). *Pre and postverbal subject positions in Spanish: a minimalist account*. Unpublished doctoral dissertation. Seattle, WA: University of Washington.

Ordoñez, F. (1998a). The inversion construction in interrogatives in Spanish and Catalan. In J. Lema, and E. Treviño (Eds.), *Theoretical analyses on Romance languages* (pp. 330-350). Amsterdam: John Benjamins.

Ordoñez, F. (1998b). Postverbal assymetries in Spanish. *Natural language and linguistic theory, 16*, 313-46.

Ordóñez, F. and Olarrea, A. (2006). Microvariation in Caribbean/non Caribbean Spanish interrogatives. *Probus, 18*, 59-96.

Ordoñez, F. and Treviño, E. (1999). Left dislocated subjects and the *pro-drop* parameter: A case study of Spanish. *Lingua, 107*, 1-2, 39-68.

Otheguy, R., Zentella, A., Erker, D., and Livert, D. (2005). Factores gramaticales y sociodemográficos en la evolución y continuidad de los pronombres sujetos del español de los latinoamericanos en Nueva York. Paper presented at the XIV Congreso de la asociación de lingüística y filología de América latina (ALFAL). México: Universidad Autónoma de Nuevo León, Monterrey.

Otheguy, R. and Zentella, A. (2007). Apuntes preliminares sobre el contacto lingüístico y dialectal en el uso pronominal del español en Nueva York. In K. Potowski, and R. Cameron (Eds.), *Spanish in contact: policy, social and linguistic inquiries* (pp. 275- 95). Amsterdam, The Netherlands, and Philadelphia, PA: John Benjamins.

Padrón, A. E. (1948). Giros sintácticos corrientes en el habla popular, culta y semi-culta cubanas. *Boletín de Filología, 5*, 467-495.

Padrón, A. E. (1949a). Giros sintácticos usados en Cuba. *Thesaurus, 5*, 34-48.

Padrón, A. E. (1949b). Comentarios de sintaxis cubana. *Revista bimestre cubana, 64*, 195-210.

Patín Maceo, M. A. (1940). Dominicanismos. *Boletín de la academia dominicana de la lengua, I,* 2, 33-47.

Pérez-Leroux, A. T. and Glass, W. R., eds. (1997). *Contemporary perspectives on the acquisition of Spanish. Volume 1: developing grammars*. Somerville, MA: Cascadilla press.

Pérez Sala, P. (1973). La interferencia lingüística del inglés en el español hablado en Puerto Rico: un estudio sobre la sintaxis de los puertorriqueños. Hato Rey: Inter-American University Press.

Poplack, S. (1978). Dialect acquisition among Puerto Rican bilinguals. *Language in society, 7*, 1, 89-103.

Quirk, R. J. (1972). On the extent and origin of Questions in the form of '*¿Qué tú tenes?*', *Hispania, 55*, 303-04.

R.A.E. (1973). *Esbozo de una nueva gramática de la lengua española*. Madrid: Espasa-Calpe.

R.A.E. (1991). *Esbozo de una nueva gramática de la lengua española*. Madrid: Espasa-Calpe.

Ranson, D. (1991). Person Marking in the Wake of /s/ Deletion in Andalusian Spanish, *Language Variation and Change*, 3, 133-152.

Ribeiro, I. M. O. (1994). *A sinatxe da ordem no português arcaico: o efeito V2*. Doctoral dissertation. Campinas, SP: UNICAMP.

Rizzi, L. (1982). *Issues in Italian syntax.* Dordrecht: Foris.

Rizzi, L. (1986). Null Objects in Italian and the theory of *pro*. *Linguistic inquiry, 17*, 501-57.

Rizzi, L. (1990). *Relativized minimality.* Cambridge: MIT press.

Rizzi, L. (1991). Residual verb second and the wh-criterion. *Technical reports in formal and computational linguistics, 3*. Université de Genève.

Rizzi, L. (1994). Early null subjects and root null subjects. In T. Hoekstra and B. D. Schwartz (Eds.), *Language acquisition studies in generative grammar* (pp. 151-176). Amsterdam/Philadelphia: John Benjamins

Roberts, I. (1993). *Verbs and diachronic syntax.* Dordrecht, Kluwer.

Rosengren, P. (1974). *Presencia y ausencia de los pronombres personales sujeto en español moderno.* Stockholm: Almquist and Wiiksell International.

Roussou, A. (1993). I-to-C movement and the *that*-trace filter. *UCL Working papers in linguistics, 5*, 103-27.

Safir, K. (1982). *Syntactic chains and the definitness effect*. PhD dissertation. Cambridge, MA: MIT.

Sánchez, L. (2003). *Quechua-Spanish bilingualism. Interference and convergence in functional categories*. Language acquisition and language disorders series. Amsterdam: John Benjamins.

Serratrice, B., Sorace, A., and Paoli, S. (2004). Crosslinguistic influence at the syntax–pragmatics interface: Subjects and objects in English–Italian bilingual and monolingual acquisition. *Bilingualism: Language and Cognition, 7*, 183-205.

Schmidt, A. (1985). *Young people's dyirbal*. Cambridge: Cambridge university press.

Silva-Corvalán, C. (1982). Subject expression and placement in Mexican-American Spanish. In J. Amastae, and L. Elías-Olivares, *Spanish in the United States* (pp. 93-120). New York: Cambridge University Press.

Silva-Corvalán, C. (1994). *Language contact and change. Spanish in Los Angeles*. Oxford: Clarendon Press.

Silva-Villar, L. (1996). The diachronic syntax of expletive creation. *Anuario del seminario de filología vasca 'Juilo de Urquijo,' 30*, 1, 173-193.

Silva-Villar, L. (2004). Growing expletives. *Paper in Colloquium on expletive subjects in Romance and Germanic languages*. In http://ling.uni-konstanz.de/pages/home/kaiser/sfb/pdf/koll_brosch.pdf (Retrieved: December 15, 2006)

Solà, J. (1992). *Agreement and subjects*. Doctoral dissertation. Barcelona, Spain: Universitat Autònoma de Barcelona.

Solà, J., Lloret, M. R., Mascarò, J., and Pérez Saldanya, M. (2002). *Gramática del català contemporani.* Barcelona: Empúries.

Speas, M. (1994). Null arguments in a theory of economy projection. *UMOP, 17*, 179-208.

Spiegel, M. R., and Stephens, L. J. (1999). *Theory and problems of statistics*. Schaum's Outline Series, McGraw-Hill: New York.

Spitzer, L. (1917). 'Es' im Portugiesischen. *Zeitschrift für romanische Philologie, 38*, 713-18.

Spitzer, L. (1920). Mall[orquinisch] 'ell.' *Neuphololologische Mitteilungen, 21*, 130-32.

Spitzer, L (1941). Paralelos catalanes y portugueses de ello. *Revista de filología hispánica, 3*, 272.
Sportiche, D. (1992). Clitic Constructions. Manuscript, UCLA..

Sportiche, D. (1998). Pronominal Clitic Dependencies. In H. van Riemsdijk (Ed.). *Language Typology: Clitics in the European Languages*. Berlin: Mouton de Gruyter.

SPSS Inc. (2003). *SPSS Base 12.0 User's guide.* Chicago, IL.

Suñer, M. (1982a). On null subjects. *Linguistic analysis, 9*, 1, 55 – 78.

Suñer, M. (1982b). *Syntax and semantics of Spanish presentational sentence-types.* Washington, D.C.: Georgetown University Press.

Suñer, M. (1994). V-movement and the licensing of argumental wh-phrases in Spanish. *Natural language and linguistic theory, 12*, 335-372.

Suñer, M. (2003). The lexical preverbal subject in a Romance Null Subject Language: Where are thou? In R. Núñez-Cedeño, et al.. (Eds.), *A romance perspective on language knowledge and use. Selected papers from the 31st linguistic symposium on Romance languages (LSRL)* (pp. 341-358). Amsterdam: John Benjamins.

Suñer, M. and Lizardi, C. (1992). Dialectal variation in an argumentation/non-argumental asymmetry in Spanish. In J. Amastae, G. Goodal, M. Montalbetti, and M. Phinney (Eds.), *Contemporary Research in Romance Linguistics. Papers from the XXII Linguistic Symposium on Romance Languages* (pp. 187-204). Amsterdam/ Philadelphia: John Benjamins.

Tarallo, F. (1983). *Relativization strategies in Brazilian Portuguese*. Doctoral dissertation. Philadelphia, PA: University of Pennsylvania.

Terrell, T. (1978). Sobre la aspiración y elisión de /s/ implosiva y final en el español de Puerto Rico. *Nueva revista de filología hispánica, 27*, 24-38.

Thomason, S., and Kaufman, T. (1988). *Language contact, creolization, and genetic linguistics*. Berkeley: University of California press.

Torres Morais, M. A. (1993). Aspectos diacrônicos do movimento do verbo, estrutura da frase e caso nominativo no português do Brasil. In I. Roberts, and M. A. Kato (Eds.), *Português brasileiro – uma viagem diacrônica* (pp. 263-306). Campinas, SP: Editora da UNICAMP.

Torres Morais, M. A. (1995). *Do português clásico ao português moderno: um estudio da cliticização e do movimento do verbo.* Doctoral dissertation. Campinas, SP: UNICAMP.

Torrego, E. (1984). On inversion in Spanish and some of its effects. *Linguistic inquiry, 1*, 103-129.

Toribio, A. J. (1993). *Parametric variation in the licensing of nominals.* Doctoral dissertation. Ithaka, U.S.: Cornell University.

Toribio, A. J. (2000a). Setting parametric limits on dialectic variation in Spanish. *Lingua, 110*, 315-341.

Toribio, A. J. (2000b). Language variation and the linguistic enactment of identity among Dominicans. *Linguistics, 38*, 5, 1133-1159.

Toribio, A. J. (2002). Focus on clefts in Dominican Spanish. In J. Lee, K. Geeslin, and J. Clements (Eds.), *Structure, meaning, and acquisition in Spanish* (pp.130-146). Cascadilla Press.

Toribio, A. J. (2004). Spanish-English speech practices: Bringing chaos to order. *International Journal of Bilingual Education and Bilingualism, 7*, 133-154.

Uriagereka, J. (1995). An F position in Western Romance. In K. E. Kiss (Ed.), *Discourse configurational languages* (pp. 153-175). New Yor/Oxford: Oxford university press.

Valian, V. (1990). Null subjects: a problem for parameter-setting models of language acquisition. *Cognition, 35*, 105-122.

Vance, B. S. (1989). *Null subjects and syntactic change in medieval French.* Doctoral dissertation. Ithaka, U.S.: Cornell Univeristy.

Vennemann, T. (1974). Topic, subject and word order: from SXV to SVX via TVX. In J. Anderson, and C. Jones (Eds.), *Proceedings of the 1st International Conference on Historical Linguistics, vol. 1: Syntax, morphology, internal and comparative reconstruction* (pp. 339-376). Amsterdam: North Holland.

Yap, V., Matthews, S., and Horie, K. (2004). From pronominalizer to pragmatic marker: Implications for unidirectionality from a crosslinguistic perspective. In M. Norde et al (Eds.), *Up and down the Cline: The Nature of Grammaticalization* (pp. 137-168). Amsterdam: John Benjamins.

Zagona, K. (2002). *The syntax of Spanish.* Cambridge, UK: Cambridge University Press.

Zubizarreta, M. L. (1994). El orden de palabras en español y el caso nominativo. In V. Demonte (Ed.), *Gramática del español* (pp. 21-51). México: El colegio de México.

Zubizarreta, M. L. (1998). *Prosody, focus, and word order*. Cambridge, MA: MIT Press.

Zubizarreta, M. L. (1999a). Word order in Spanish and the nature of the nominative case. In K. Johnson, and I. Roberts (Eds.), *Beyond principles and parameters* (pp. 223-250). Netherlands: Kluwer Academic publishers.

Zubizarreta, M. L. (1999b). The Cl(itic) projection in questions. *CatWPL,* 7, 253-277.

Zubizarreta, M. L. (2001). The constraint on preverbal subjects in Romance interrogatives: A minimality effect. In A. Hulk, and J. Y. Pollock (Eds.), *Subject inversion in Romance and the theory of universal grammar* (pp. 183 – 204). Oxford: Oxford University Press.

Zwanziger, E., Allen S., Genesee F. (2005). Crosslinguistic influence in bilingual acquisition: subject omission in learners of Inuktitut and English. *Journal of child language, 32*, 893 – 909.

Curriculum vitae

María J. Cabrera-Puche

Education

12/2007	Rutgers, the State University of N.J., Graduate Program in Spanish (Bilingualism and Second Language Acquisition), PhD.
08/2002	West Virginia University, TESOL/Spanish, M.A.
08/2002	West Virginia University, Secondary Education, M.A.
07/2000	Universidad de Murcia, English Philology, B.A.

Principal occupations

Fall 2007	- Assistant professor, West Chester University, PA.
Summer 2007	- Adjunct instructor, Rutgers, the State University of N.J.
Spring 2007	- Adjunct instructor, Rutgers, the State University of N.J. - TA, Rutgers, the State University of N.J.
Winter 2006-07	- Adjunct instructor, Rutgers, the State University of N.J.
Fall 2006	- TA, Rutgers, the State University of N.J.
Summer 2006	- Adjunct instructor, Rutgers, the State University of N.J. - Adjunct instructor, WLI at Rutgers, the State University of N.J.
Spring 2006	- Adjunct instructor, Rutgers, the State University of N.J. - GRA, Rutgers, the State University of N.J.
Fall 2005	- Adjunct instructor, Rutgers, the State University of N.J. - University supervisor, GSE, Rutgers, the State University of N.J. - GRA, Rutgers, the State University of N.J.
Summer 2005	- Co-director summer study abroad in Perú, Rutgers, the State University of N.J. - Research Assistant, Rutgers, the State University of N.J.
Spring 2005	- TA, Rutgers, the State University of N.J. - Research Assistant, Rutgers, the State University of N.J.
Fall 2004	- TA, Rutgers, the State University of N.J. - Research Assistant, Rutgers, the State University of N.J.
Summer 2004	- ESL instructor, Summer Migrant Education Program in Farm and Home Instruction, Gloucester County Special Services School District, N.J.
Spring 2004	- Spanish K-12 teacher, Hammonton Middle School, N.J.
Fall 2003	- Spanish K-12 teacher, Hammonton Middle School.
Summer 2003	- Adjunct instructor, Rutgers, the State University of N.J., Camden campus. - Adjunct instructor, Camden County College, N.J. - ESL instructor in the Summer Migrant Education Program in Farm and Home Instruction, Gloucester County Special Services School District, N.J.
Spring 2003	- Adjunct instructor, Camden County College, N.J. - Spanish K-12 teacher, Hammonton Middle School, N.J.

Fall 2002	- Spanish K-12 teacher, Hammonton Middle School, N.J.
Summer 2002	- TA, West Virginia University.
Spring 2002	- TA, West Virginia University.
Fall 2001	- TA, West Virginia University.
Summer 2001	- TA, West Virginia University.
Spring 2001	- TA, West Virginia University.
Fall 2000	- TA, West Virginia University.

Publications

Fall 2007	- Co-editor, *Selected papers from the 36th Linguistic Symposium on Romance Languages (LSRL)*, March-April 2006. John Bnejamins.
Spring 2006	- Co-editor, graduate magazine *La Jornada*, in Department of Spanish and Portuguese, Rutgers, the State University of N.J.